GENERAC® | MOBILE

Owner's Manual

Light Tower

MLTS

SN _____ and higher

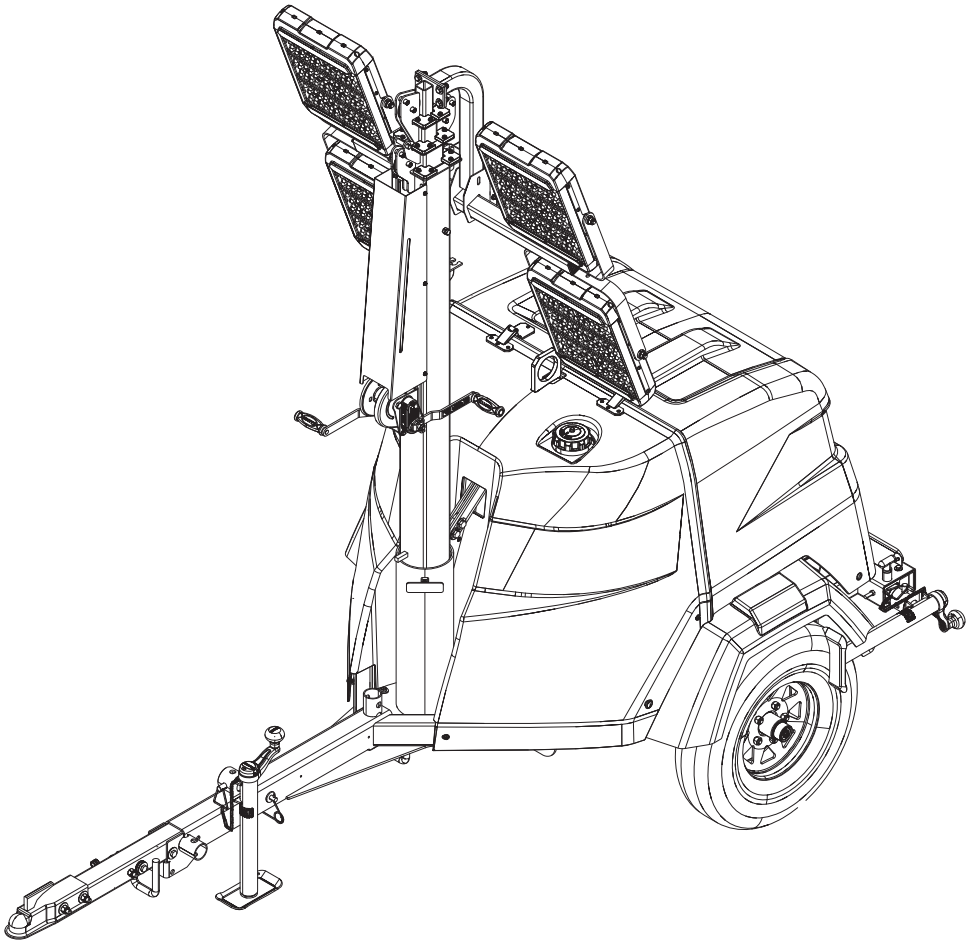

010568

For technical assistance contact:

www.generacmobileproducts.com

Technical Service

1-800-926-9768

SAVE THIS MANUAL FOR FUTURE REFERENCE

Use this page to record important information about your unit

Unit Model No.	
Unit Serial No.	
Engine Model No.	
Engine Serial No.	
Generator Model No.	
Generator Serial No.	

Record the information found on your unit data label on this page. See unit serial number location (***Unit Serial Number Locations***). The label plate is affixed to the inside partition, to the left of the control panel console.

Engine and generator serial numbers are located on separate data plates affixed to the engine and generator.

When contacting a Generac Mobile Authorized Service Dealer (GMASD) about parts and service, supply the complete model number and serial number of the unit.

Operation and Maintenance: Proper maintenance and care of the unit ensures a minimum number of problems and keeps operating expenses at a minimum. It is the operator's responsibility to perform all safety checks, to verify that all maintenance for safe operation is performed promptly, and to have the equipment checked periodically by a GMASD. Normal maintenance, service and replacement of parts are the responsibility of the owner or operator and, as such, are not considered defects in materials or workmanship within the terms of the warranty. Individual operating habits and usage may contribute to the need for additional maintenance or service.

⚠WARNING

CANCER AND REPRODUCTIVE HARM

www.P65Warnings.ca.gov.

(000393a)

⚠WARNING

Breathing diesel engine exhaust exposes you to chemicals known to the State of California to cause cancer and birth defects or other reproductive harm.

- Always start and operate the engine in a well-ventilated area.
- If in an enclosed area, vent the exhaust to the outside.
- Do not modify or tamper with the exhaust system.
- Do not idle the engine except as necessary.

For more information go to www.P65Warnings.ca.gov/diesel. (000394)

Table of Contents

Section 1:Introduction and Safety

Introduction **1**
Read This Manual Thoroughly 1
Safety Rules **1**
How to Obtain Service 1
General Hazards **2**
Explosion and Fire Hazards **2**
Trailer Hazards **2**
Electrical Hazards **3**
Battery Hazards **3**
Fuel Hazards **4**
Engine Safety **4**
Operating Safety **4**
Positioning the Unit 4
Starting the Unit 4
Raising and Lowering the Mast 5
Service Safety **5**
Towing Safety **5**
Hitch and Coupling 5
Running Lights 6
Wheels and Tires 6
Safe Towing Techniques 6
Reporting Trailer Safety Defects **6**
Safety and Operating Decals **7**

Section 2:General Information

Specifications **11**
Unit Dimensions **12**
Unit Serial Number Locations **13**
Trailer Tongue Storage and Tow Positions **14**
Place Trailer Tongue in Tow Position 14
Place Trailer Tongue in Storage Position 15
Component Locations **16**
Control Panel **17**
Standard Analog 17
Analog with Import Power (If Equipped) 17
Power Zone® (If Equipped) 18
Power Zone with Import Power (If Equipped) 18
Power Zone Autolight Controller (If Equipped) **19**
About UTILITY Mode (If Equipped) **21**
About SLEEP Mode (If Equipped) **21**
Engine Derating **21**

Section 3:Operation

Unit Setup **23**
Raising Mast—Manual Winch **24**
Raising Mast—Electric Winch (If Equipped) **25**
Prestart Checklist **26**
Starting Unit—Analog Controls **26**
Starting Unit—Power Zone Controls (MANUAL Mode) **27**
Starting Unit—Power Zone Controls (AUTO Mode) **28**
AUTO Run Scheduling 28
Operating Lights—Analog Controls **29**
Operating Lights—Power Zone Controls (MANUAL Mode) **29**
Operating Lights—Power Zone Controls (AUTO Mode) **29**
Shutting Down Unit—Analog Controls **30**
Shutting Down Unit—Power Zone Controls (MANUAL Mode) **30**
Shutting Down Unit—Power Zone Controls (AUTO Mode) **31**
Automatic Shutdown **31**
Starting Utility Mode (If Equipped)—Analog Controls **32**
Starting Utility Mode (If Equipped—Power Zone Controls **32**
Stopping Utility Mode (If Equipped)—Analog Controls **33**
Stopping Utility Mode (If Equipped)—Power Zone Controls **34**
Dusk-to-Dawn Sensor (If Equipped) **35**
Preparing Sensor for Use 35
Customer Convenience Receptacles (If Equipped) **36**

Load Limit and Overload 36

Removing Loads from Receptacles (If Equipped) 36

Storing the Unit 36

Lowering Mast—Manual Winch 36

Lowering Mast—Electric Winch (If Equipped) 37

Manually Lowering Electric Mast 37

Positive Air Shutdown (PAS) (If Equipped) 37

Test the PAS 37

Reset the PAS 38

Lower Radiator Hose Heater (If Equipped) 38

Tandem Tow (If Equipped) 38

Telemetry (If Equipped) 38

Spark Arrester (If Equipped) 38

Heated Fuel Filter (If Equipped) 38

Towing the Unit 39

Lifting the Unit 40

Tying Down the Unit 40

Section 4:Maintenance

Emissions Information 41

Daily Walk-Around Inspection 41

General Maintenance 41

Preparing for Service 41

Cleaning the Unit 41

Inspecting the Unit 41

Basic Maintenance Schedule 42

Manual Winch: Use, Operation, and Maintenance 43

Prior to Use 43

Operation 43

Maintenance 43

Electric Winch (If Equipped): Use, Operation, and Maintenance 43

Winch Mechanical Brake 43

Trailer Wheel Bearings 44

Jack Maintenance 44

Section 5: Troubleshooting

General Troubleshooting 45

Troubleshooting the Lights 46

Troubleshooting Controller Fault Indicators 47

Section 6:Wiring Diagrams

Mast Junction Box Wiring and Light Connections 49

AC Wiring (1 of 3) 50

AC Wiring (2 of 3) 51

AC Wiring (3 of 3) 52

DC Wiring 53

AC Wiring—Power Zone (If Equipped) (1 of 3) 54

AC Wiring—Power Zone (If Equipped) (2 of 3) 55

AC Wiring—Power Zone (If Equipped) (3 of 3) 56

DC Wiring—Power Zone (If Equipped) 57

Trailer Lights 58

Section 1: Introduction and Safety

Introduction

Thank you for purchasing a Generac Mobile product. This unit has been designed to provide high-performance, efficient operation, and years of use when maintained properly.

The information in this manual is accurate based on products produced at the time of publication. The manufacturer reserves the right to make technical updates, corrections, and product revisions at any time without notice.

Read This Manual Thoroughly

WARNING

Consult Manual. Read and understand manual completely before using product. Failure to completely understand manual and product could result in death or serious injury. (000100a)

If any section of the manual is not understood, contact your nearest GMASD, or contact Generac Mobile at 1-800-926-9768 or ***www.generacmobileproducts.com*** with any questions or concerns.

The owner is responsible for proper maintenance and safe use of the equipment. Comply with regulations the Occupational Safety and Health Administration (OSHA) has established, or with equivalent standards. Also, verify that the unit is applied, used, and maintained in accordance with the manufacturer's instructions and recommendations. Do nothing that might alter safe application/usage and render the unit in noncompliance with the aforementioned codes, standards, laws, and regulations.

Save these instructions for future reference. This manual contains important instructions for the unit that should be followed during setup, operation and maintenance of the unit and battery. ALWAYS supply this manual to any individual that will use this machine.

Safety Rules

The manufacturer cannot anticipate every possible circumstance that might involve a hazard. The alerts in this manual, and on tags and decals affixed to the unit, are not all inclusive. If using a procedure, work method, or operating technique that the manufacturer does not specifically recommend, verify that it is safe for others and does not render the equipment unsafe.

Throughout this publication, and on tags and decals affixed to the unit, DANGER, WARNING, CAUTION, and NOTE blocks are used to alert personnel to special instructions about a particular operation that may be hazardous if performed incorrectly or carelessly. Observe them carefully. Alert definitions are as follows:

DANGER

Indicates a hazardous situation which, if not avoided, will result in death or serious injury.

(000001)

WARNING

Indicates a hazardous situation which, if not avoided, could result in death or serious injury.

(000002)

CAUTION

Indicates a hazardous situation which, if not avoided, could result in minor or moderate injury.

(000003)

NOTE: Notes contain additional information important to a procedure and will be found within the regular text of this manual.

These safety alerts cannot eliminate the hazards that they indicate. Common sense and strict compliance with the special instructions while performing the action or service are essential to preventing accidents.

How to Obtain Service

When the unit requires servicing or repairs, contact a GMASD for assistance. Service technicians are factory-trained and are capable of handling all service needs. For assistance locating a dealer, visit ***www.generacmobileproducts.com/parts-service/find-service***. When contacting a GMASD about parts and service, always supply the complete model number and serial number of the unit as given on its data decal located on the unit. Record the model number and serial numbers in the spaces provided on the inside front cover of this manual.

General Hazards

DANGER

Asphyxiation. Running engines produce carbon monoxide, a colorless, odorless, poisonous gas. Carbon monoxide, if not avoided, will result in death or serious injury. (000103)

WARNING

Hearing Loss. Hearing protection is recommended when using this machine. Failure to wear hearing protection could result in permanant hearing loss. (000107)

WARNING

Moving Parts. Keep clothing, hair, and appendages away from moving parts. Failure to do so could result in death or serious injury. (000111)

WARNING

Hot Surfaces. When operating machine, do not touch hot surfaces. Keep machine away from combustibles during use. Hot surfaces could result in severe burns or fire. (000108)

WARNING

Risk of injury. Do not operate or service this machine if not fully alert. Fatigue can impair the ability to service this equipment and could result in death or serious injury. (000215)

WARNING

Risk of burns. Allow engine to cool before draining oil or coolant. Failure to do so could result in death or serious injury. (000139)

Explosion and Fire Hazards

DANGER

Explosion and Fire. Fuel and vapors are extremely flammable and explosive. Add fuel in a well ventilated area. Keep fire and spark away. Failure to do so will result in death or serious injury. (000105)

WARNING

Risk of Fire. Unit must be positioned in a manner that prevents combustible material accumulation underneath. Failure to do so could result in death or serious injury. (000147)

WARNING

Risk of Fire. Hot surfaces could ignite combustibles, resulting in fire. Fire could result in death or serious injury. (000110)

Trailer Hazards

WARNING

Personal injury. Trailer must be securely coupled to the hitch with the chains correctly attached. Uncoupled or unchained towing could result in death or serious injury. (000233a)

WARNING

Personal injury. Do not operate unit during transport. Doing so could result in death, serious injury, or property damage. (000231a)

WARNING

Crushing hazard. Verify unit is properly secured and on level ground. An unsecured unit can suddenly roll or move, causing death or serious injury. (000234a)

WARNING

Property or Equipment Damage. Tighten wheel lug nuts after first 50 miles to factory specifications. Failure to do so could result in death, serious injury, property or equipment damage. (000235)

Electrical Hazards

DANGER

Electrocution. In the event of electrical accident, immediately shut power OFF. Use non-conductive implements to free victim from live conductor. Apply first aid and get medical help. Failure to do so will result in death or serious injury. (000145)

DANGER

Electrocution. Water contact with a power source, if not avoided, will result in death or serious injury.

(000104)

DANGER

Electrocution. Contact with bare wires, terminals, and connections while generator is running will result in death or serious injury.

(000144)

DANGER

Electrocution. Verify electrical system is properly grounded before applying power. Failure to do so will result in death or serious injury. (000152)

DANGER

Electrocution. Do not wear jewelry while working on this equipment. Doing so will result in death or serious injury.

(000188)

DANGER

Electrocution. DO NOT use the unit if electrical cord is cut or worn through. Doing so will result in death or serious injury.

(000263a)

Battery Hazards

DANGER

Electrocution. Do not wear jewelry while working on this equipment. Doing so will result in death or serious injury.

(000188)

WARNING

Explosion. Batteries emit explosive gases while charging. Keep fire and spark away. Wear protective gear when working with batteries. Failure to do so could result in death or serious injury.

(000137a)

WARNING

Explosion. Do not dispose of batteries in a fire. Batteries are explosive. Electrolyte solution can cause burns and blindness. If electrolyte contacts skin or eyes, flush with water and seek immediate medical attention.

(000162)

WARNING

Risk of burn. Do not open or mutilate batteries. Batteries contain electrolyte solution which can cause burns and blindness. If electrolyte contacts skin or eyes, flush with water and seek immediate medical attention. (000163a)

WARNING

Environmental Hazard. Always recycle batteries at an official recycling center in accordance with all local laws and regulations. Failure to do so could result in environmental damage, death, or serious injury. (000228)

Always recycle batteries in accordance with local laws and regulations. Contact your local solid waste collection site or recycling facility to obtain information on local recycling processes. For more information on battery recycling, visit the Battery Council International website at: ***http://batterycouncil.org***

Fuel Hazards

DANGER

Explosion and fire. Fuel and vapors are extremely flammable and explosive. No leakage of fuel is permitted. Keep fire and spark away. Failure to do so will result in death or serious injury. (000192)

DANGER

Risk of fire. Allow fuel spills to completely dry before starting engine. Failure to do so will result in death or serious injury.

(000174)

- **DO NOT** fill fuel tank near an open flame, while smoking, or while engine is running. **DO NOT** fill tank in an enclosed area with poor ventilation.
- **DO NOT** operate with the fuel tank cap loose or missing.

Engine Safety

Internal combustion engines present special hazards during operation and fueling. Failure to follow the safety guidelines described below could result in severe injury or death. Read and follow all safety alerts described in the engine operator's manual. A copy of this manual was supplied with the unit when it was shipped from the factory.

- **DO NOT** run engine indoors or in an area with poor ventilation. Make sure engine exhaust cannot seep into closed rooms or ventilation equipment.
- **DO NOT** clean air filter with gasoline or other types of low flash point solvents.
- **DO NOT** operate the unit without a functional exhaust system.
- Shut the engine down if any of the following conditions exist during operation:
  - Noticeable change in engine speed.
  - Loss of electrical output.
  - Equipment connected to the unit overheats.
  - Sparking occurs.
  - Engine misfires or there is excessive engine/ generator vibration.
  - Protective covers are loose or missing.
  - Ambient air temperature is above 120 °F (49 °C).

Operating Safety

Positioning the Unit

DANGER

High Voltage. Verify area above unit is clear of overhead wires and obstructions. Contact with high-voltage power lines will result in death or serious injury. (000260a)

WARNING

Burn hazard. Never operate lights with a damaged or missing lens cover. Lamps are hot and pressurized while in use. Unprotected lamps can shatter, causing severe injury. (000277)

- The area immediately surrounding the unit should be dry, clean, and free of debris.
- Position and operate the unit on a firm, level surface.
- If the unit is equipped with a frame grounding stud, follow any local, state, and National Electrical Code (NEC) guidelines when connecting.

Starting the Unit

DANGER

Electrocution. DO NOT use the unit if electrical cord is cut or worn through. Doing so will result in death or serious injury. (000263a)

WARNING

Equipment damage. Do not attempt to start or operate a unit in need of repair or scheduled maintenance. Doing so could result in serious injury, death, or equipment failure or damage. (000291)

Raising and Lowering the Mast

⚠WARNING

Electrocution. Do not set up or operate this unit if severe weather is expected. Lightning strikes can kill or cause severe injury even if you are not touching the unit. (000296)

⚠WARNING

> 60 mph

Do not set up the unit if high winds are expected. High winds can cause the unit to tip or fall, causing severe injury or machine damage. (000297)

⚠WARNING

Personal injury or equipment damage. Do not raise or lower the mast while the unit is operating. Doing so can break the lenses and cause the lamps to shatter. (000279)

⚠WARNING

Personal Injury. Stop immediately if the mast hangs up or the winch cable develops slack. Excess slack could cause the mast to collapse, resulting in personal injury or equipment damage. (000265)

⚠WARNING

Tipping hazard. Extend the outriggers and level the unit before raising the mast. Keep the outriggers extended while the mast is up. Failure to do so could cause the unit to tip and fall and could result in death or serious injury. (000266)

- Keep area around the unit clear of people while raising and lowering the mast.
- **ALWAYS** lower the mast when not in use.
- The tower extends up to 23 ft (7 m). Verify area above trailer is open and clear of overhead wires and obstructions.
- If for any reason any part of the mast hangs up or winch cable develops slack while raising or lowering tower, stop immediately and contact a GMASD.
- **NEVER** remove safety pin or pull mast locking pin while tower is up.

Service Safety

⚠WARNING

Accidental start-up. Disconnect negative battery terminal before servicing to prevent accidental engine rotation. Failure to do so could result in death or serious injury. (000148a)

This unit uses high voltage circuits capable of causing serious injury or death. Only a qualified and licensed electrician should troubleshoot or repair problems occurring in this equipment.

- Before servicing the unit, verify the control power switch and circuit breakers are OFF (O), and the negative (-) terminal on the battery is disconnected. **DO NOT** perform even routine service (oil/filter changes, cleaning, etc.) unless all electrical components are shut down.
- **ALWAYS** use extreme caution when servicing this unit in damp conditions. Do not service the unit if skin or clothing is wet. Do not allow water to collect around the base of the unit.
- **DO NOT** wash the unit with high pressure hoses, power washers, or steam cleaners. Water may collect in the unit, causing damage to electrical parts.
- Replace all missing and hard to read decals. Decals provide important operating instructions and warn of dangers and hazards.
- Wear heavy leather gloves when handling winch cables. Never let cables slip through bare hands.
- Only use mild soap and water to clean the lens covers. Other chemicals may damage the lens covers.

Towing Safety

Towing a trailer requires care. Both the trailer and vehicle must be in good condition and securely fastened to each other to reduce the possibility of an accident. Some states require that large trailers be registered and licensed. Contact your local Department of Transportation office to check on license requirements for your particular unit.

Hitch and Coupling

- Verify the hitch and coupling on the towing vehicle are rated equal to, or greater than, the trailer's gross vehicle weight rating (GVWR).
- Verify the trailer hitch and the coupling are compatible. Verify the coupling is securely fastened to the vehicle.
- **DO NOT** tow trailer using defective parts. Inspect the hitch and coupling for wear or damage.

- Connect safety chains in a crossing pattern under the tongue.
- Before towing the trailer, verify that the weight of the trailer is equal across all tires. On trailers with adjustable height hitches, adjust the angle of the trailer tongue to keep the trailer as level as possible.

Running Lights

Verify directional and brake lights on the trailer are connected and working properly.

Wheels and Tires

- Inspect trailer tires for wear and proper inflation.
- Verify wheel lug nuts are present and tightened to the specified torque.

Safe Towing Techniques

- Practice turning, stopping, and backing up in an area away from heavy traffic prior to transporting the unit.
- Maximum recommended speed for highway towing is 45 mph (72 km/h). Recommended off-road towing speed is 10 mph (16 km/h) or less, depending on terrain.
- When towing, maintain extra space between vehicles and avoid soft shoulders, curbs, and sudden lane changes.

Reporting Trailer Safety Defects

If you believe your trailer has a defect which could cause a crash or could cause injury or death, you should immediately inform the National Highway Traffic Safety Administration (NHTSA) in addition to notifying Generac Mobile.

If NHTSA receives similar complaints, it may open an investigation; and if it finds that a safety defect exists in a group of vehicles, it may order a recall and remedy campaign. However, NHTSA cannot become involved in an individual problem between you, your dealer, or Generac Mobile.

To contact NHTSA, you may either call the Auto Safety Hotline toll-free at 1-888-327-4236 (TTY:1-800-424-9153), go to ***http://www.safercar.gov***; or write to:

Administrator
NHTSA
1200 New Jersey Avenue S.E.
Washington, DC 20590

You can also obtain other information about motor vehicle safety from ***http://www.safercar.gov***.

Safety and Operating Decals

See ***Figure 1-1*** through ***Figure 1-3***. This unit features numerous safety and operating decals. These decals provide important operating instructions and warn of dangers and hazards. The following diagrams illustrate decal locations and descriptions.

Replace any missing or hard-to-read decals and use care when washing or cleaning the unit. Decal part numbers can be found in the parts manual at ***www.generacmobileproducts.com.***

ID	Description	ID	Description
1	Setup and Take-Down Instructions (Electric)	16	Control Panel Label (not shown)
2	Setup and Take-Down Instructions (Manual)	17	Neutral Bonded to Frame
3	Danger—Overhead Power Lines	18	Not A Step
4	Warning—Electrical Storms and High Wind	19	Warning—High Temperature: Do Not Remove Guard
5	Owner's Manual Location	20	Mast Junction Box Wiring (inside)
6	Electric Shock Hazard	21	Warning—Do Not Retract Outriggers With Tower Up
7	Warning—Hot Surface	22	Stowed Position
8	Warning—Pressurized Liquid	23	Lifting Point
9	Warning—Entanglement Hazard	24	Forklift and Tie-Down Point
10	Warning—Cutting Hazard	25	Engine Operation
11	Disconnect Battery Before Servicing	26	Ultra Low Sulfur Diesel Fuel Only
12	Danger—Carbon Monoxide	27	Danger—Fuel and Fueling Hazards
13	Electrical Ground Connection	28	Tie-Down Point
14	Notice—Winch Operation	29	Towing Instructions
15	Warning—Diesel Exhaust		

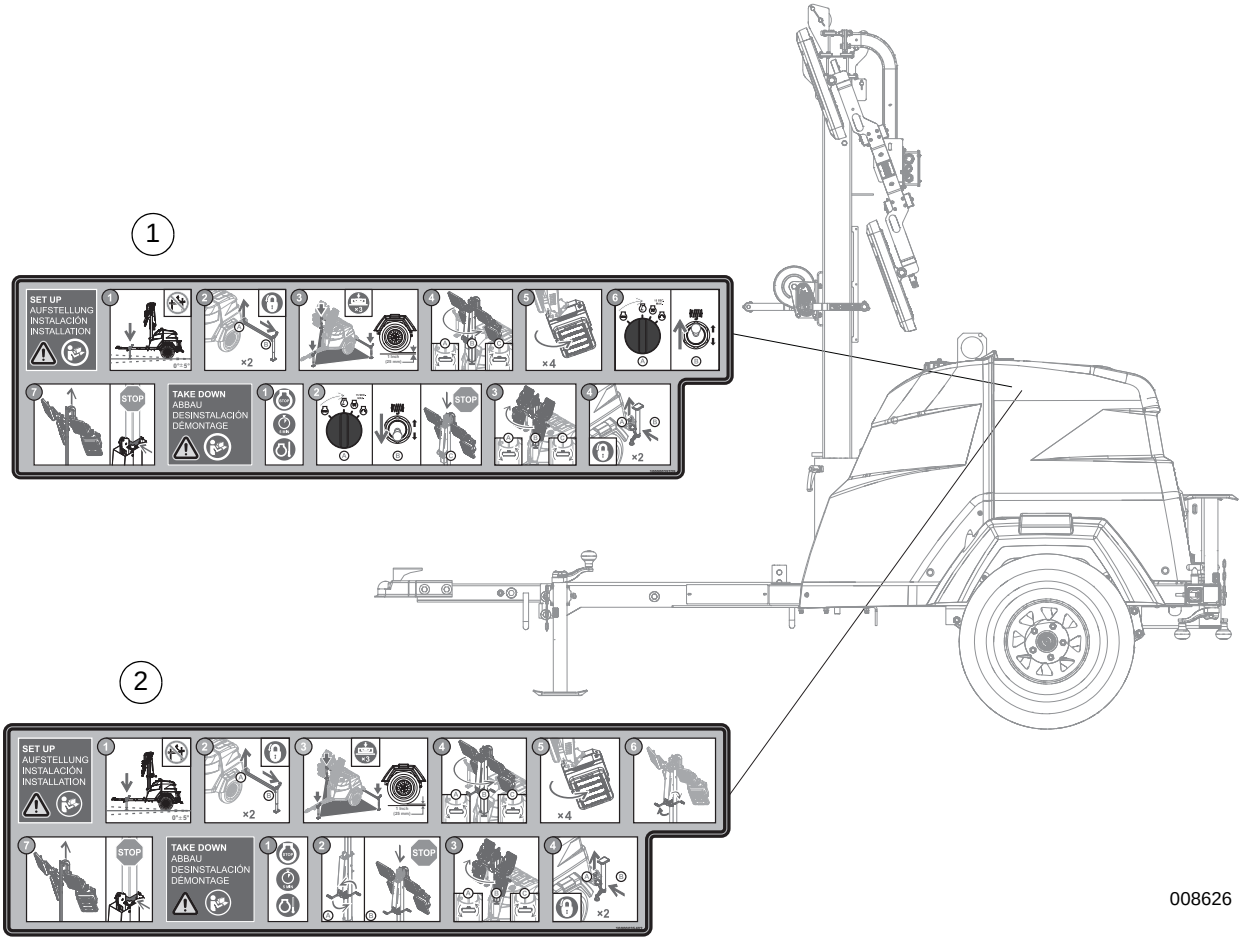

Figure 1-1. Decal Locations (1 of 3)

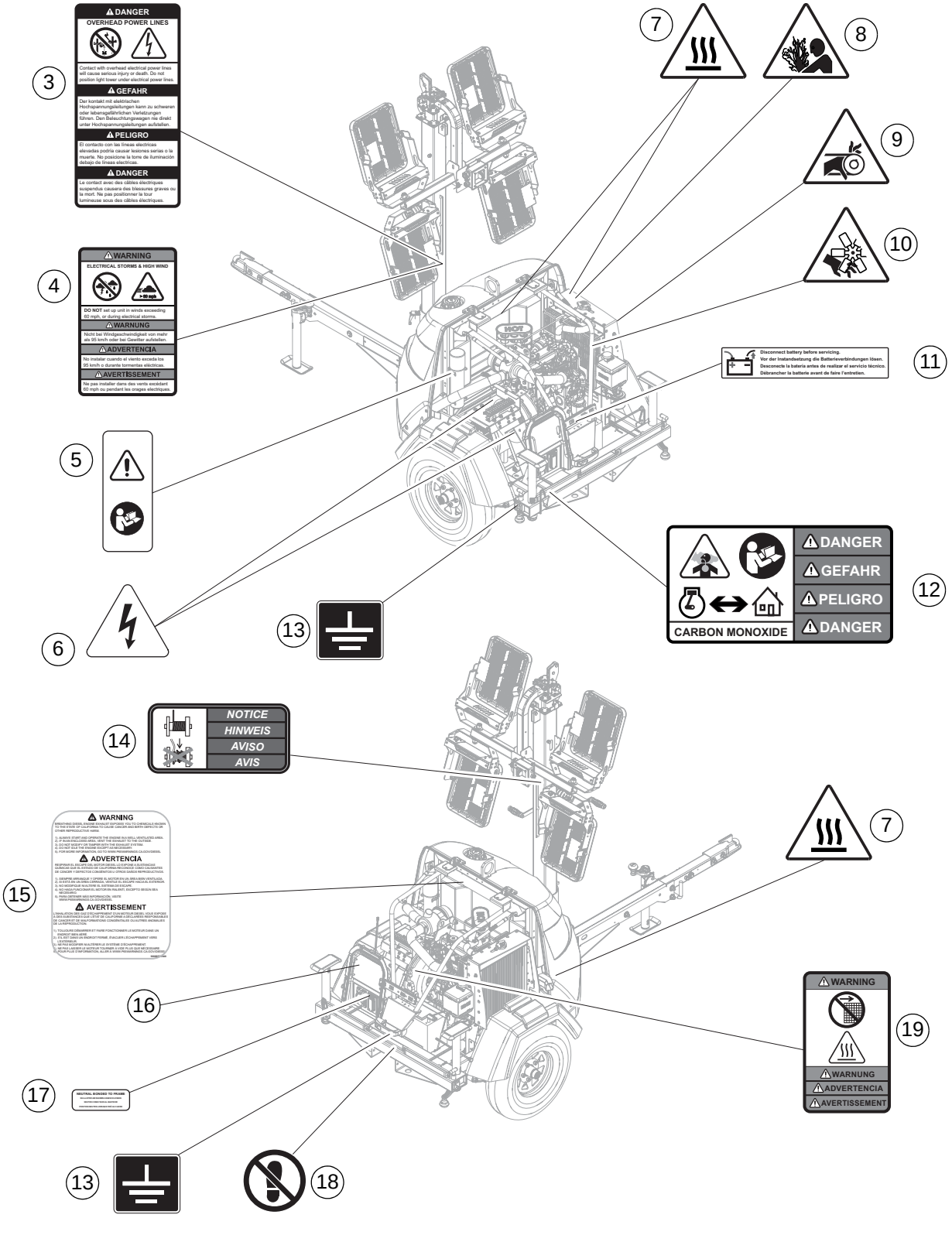

Figure 1-2. Decal Locations (2 of 3)

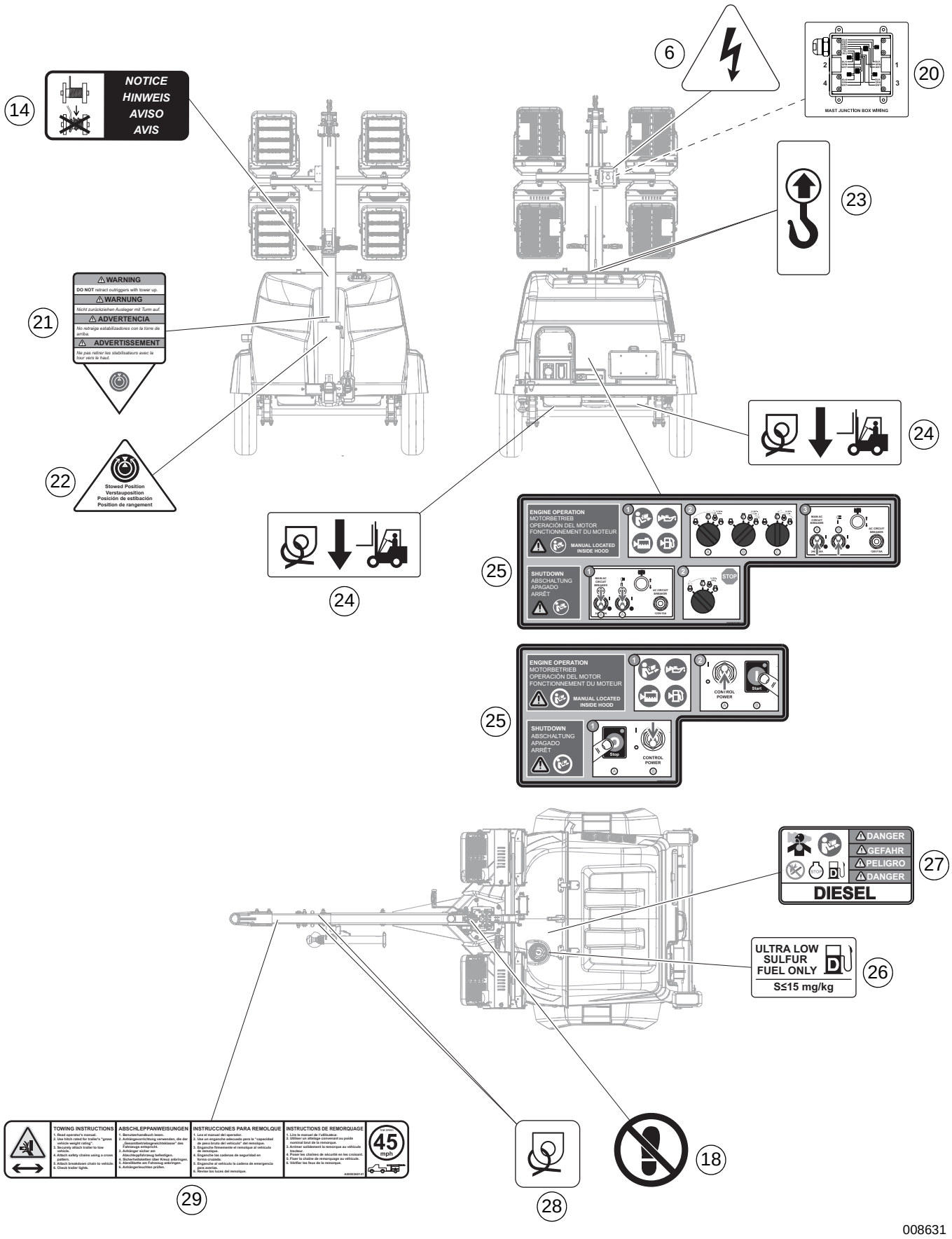

Figure 1-3. Decal Locations (3 of 3)

Specifications

Description	Unit of Measure	Standard Unit	Export Power Option
Engine			
Make (Model)	—	Mitsubishi® (L2E)	Mitsubishi® (L2E)
EPA Certification	Tier	4 Final	4 Final
Fuel Consumption—Lights Only	gph (Lph)	0.25 (0.95)	0.24 (0.91)
Battery—Group Number	—	24	24
Battery—Voltage (Qty. Per Unit)	VDC (qty)	12 (1)	12 (1)
Battery—Rating	CCA	440	440
Capacities			
Fuel Tank Volume	gal (L)	42 (159)	42 (159)
Usable Fuel Volume	gal (L)	39.9 (151)	39.9 (151)
Coolant (Incl. Engine)	qt (L)	4.1 (3.9)	4.1 (3.9)
Oil (Incl. Filter)	qt (L)	3.5 (3.4)	3.5 (3.4)
Maximum Run Time (Lights Only)	hr	162	165
Generator			
Make (Model)	—	Marathon Electric® (201CSA5430)	Marathon Electric® (201CSA5411)
Power Output	kW (kVA)	1.4 (1.4)	2.4 (2.4)
Output Voltage	V	120 (1Ø)	120 (1Ø)
Output Amperes	A	11.6	20
Frequency	Hz	60	60
AC Distribution			
Circuit Breaker Size	A	15	20
Lighting			
Lighting Type	—	Light-emitting diode (LED)	Light-emitting diode (LED)
Brightness	lm	188,000	188,000
Trailer			
Hitch—Standard	size, type	2 in (51 mm) ball	2 in (51 mm) ball
Maximum Tire Pressure	psi (kPA)	50 (345)	50 (345)
Weight			
Dry	lb (kg)	1,110 (503.5)	1,185 (537.5)
Operating	lb (kg)	1,415 (641.8)	1,440 (653.2)

Specifications are subject to change without notice.

Unit Dimensions

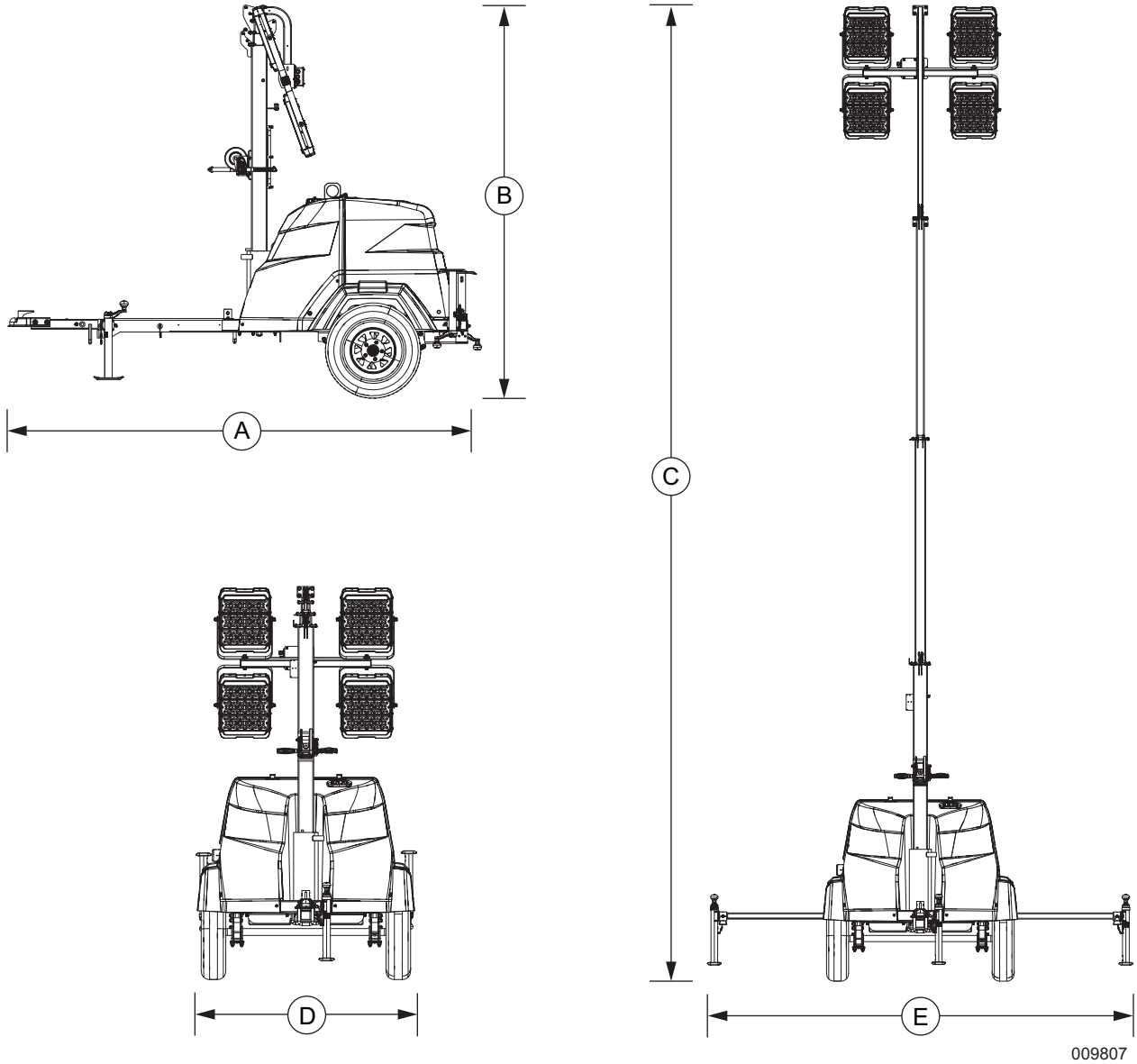

Figure 2-1. Unit Dimensions

A	B	C	D	E
118 in (3 m)	101 in (2.6 m)	23 ft (7 m)	10 ft (3.05 m)	57 in (1.45 m)

Unit Serial Number Locations

Refer to the illustration to locate the unit ID tag and Vehicle Identification Number (VIN) tag on the unit. Important information, such as the unit serial number, model number, VIN, and tire loading information are found on these tags. Record the information from these tags so it is available if the tags are lost or damaged. When ordering parts or requesting assistance, you may be asked to provide this information.

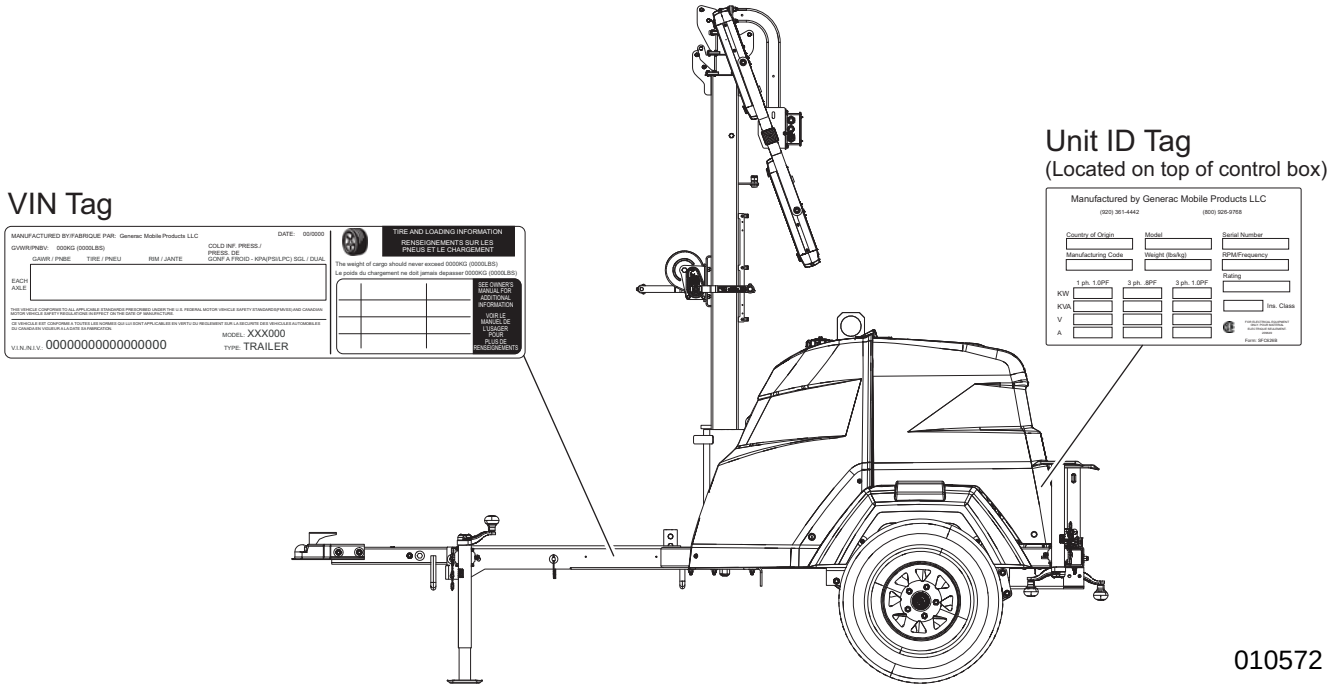

Figure 2-2. Serial Number Locations

Trailer Tongue Storage and Tow Positions

The trailer tongue is designed to fold upright for shipping and storage.

IMPORTANT NOTE: Do not attempt to tow the unit with trailer tongue in the storage position.

Place Trailer Tongue in Tow Position

1. Verify unit is on a level surface and wheels are blocked.

NOTE: See ***Figure 2-3***. Unit ships from factory with jack in the storage location (A).

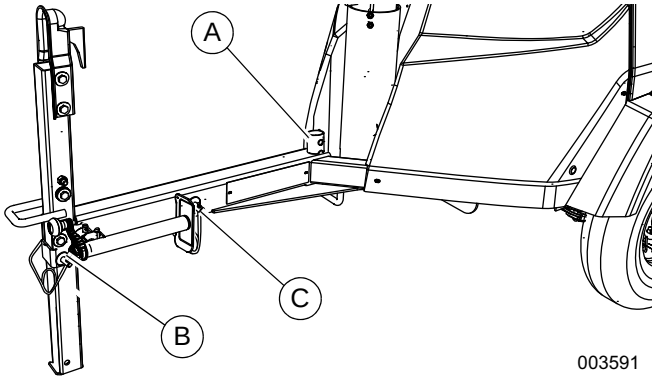

Figure 2-3. Jack and Pin Locations

2. Remove clevis securing jack parallel to ground.
3. Remove jack from tongue weldment. Hold jack vertically and extend until weldment on jack is aligned with tongue weldment.
4. See ***Figure 2-4***. Install jack and secure with clevis (D).

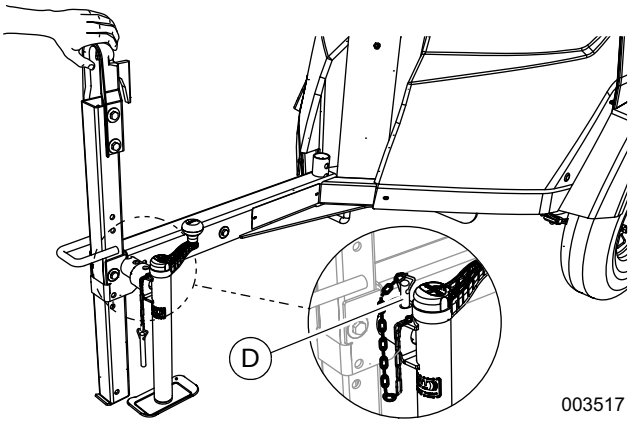

Figure 2-4. Jack Installed

5. See ***Figure 2-3***. Remove pins (B) and (C).

⚠CAUTION

Pinching and crushing hazard. To avoid possible injury, keep fingers away from pivot point when folding or unfolding trailer tongue.

(000313)

6. See ***Figure 2-5***. Using both hands, slowly lower trailer tongue into tow position.

NOTE: Varying levels of effort may be required depending on terrain.

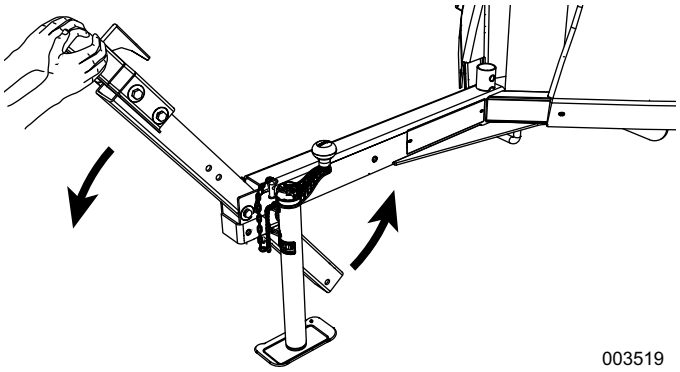

Figure 2-5. Lower Trailer Tongue into Tow Position

7. See ***Figure 2-6***. Install pins as shown to secure trailer tongue in tow position.

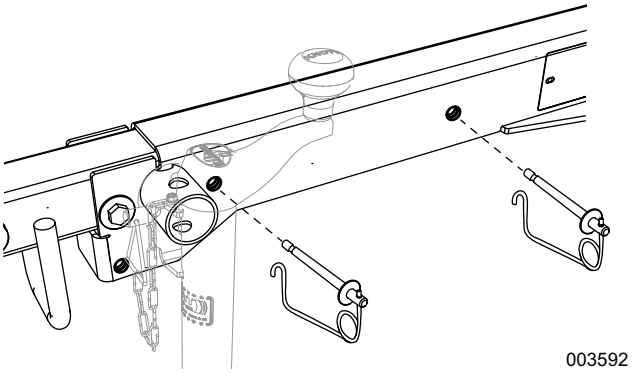

Figure 2-6. Install and Secure Pins

Place Trailer Tongue in Storage Position

1. Verify unit is on a level surface and wheels are blocked.
2. See ***Figure 2-7***. Extend jack (A) enough to allow minimum effort to pivot trailer tongue into storage position.

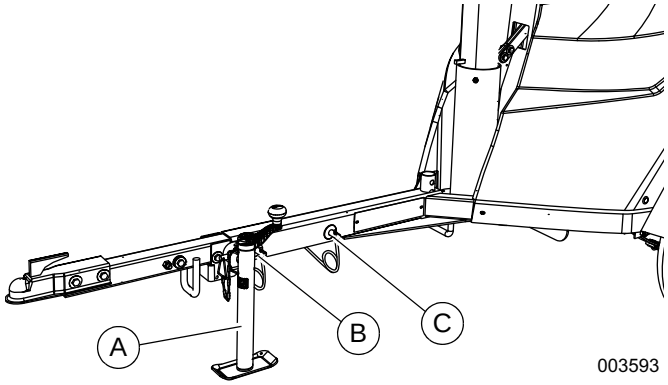

Figure 2-7. Extend Jack and Remove Pins

3. Remove pins (B) and (C) from trailer tongue.

⚠CAUTION

Pinching and crushing hazard. To avoid possible injury, keep fingers away from pivot point when folding or unfolding trailer tongue.

(000313)

4. See ***Figure 2-8***. Pivot trailer tongue into storage position.

NOTE: Varying levels of effort may be required depending on terrain.

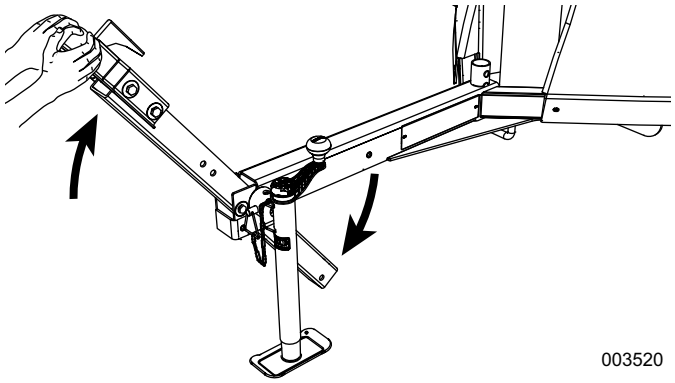

Figure 2-8. Pivot Trailer Tongue Into Storage Position

5. See ***Figure 2-9***. Install pins (B) and (C) at locations shown to secure trailer tongue in storage position.

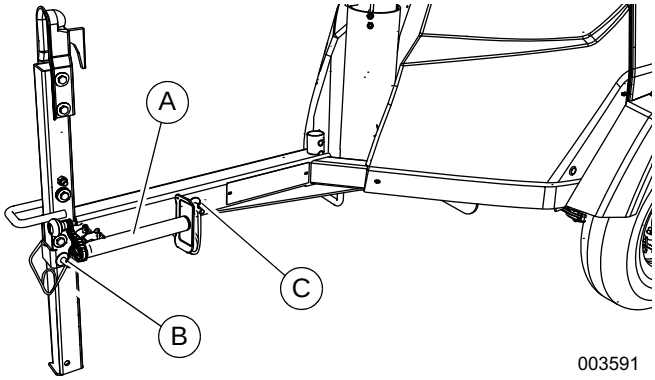

Figure 2-9. Install Pins and Rotate Jack

6. Remove clevis and remove jack (A) from tongue weldment.
7. Completely retract jack.
8. Rotate jack 90° counterclockwise, place jack on tongue weldment, and install clevis to secure jack parallel to ground.

Component Locations

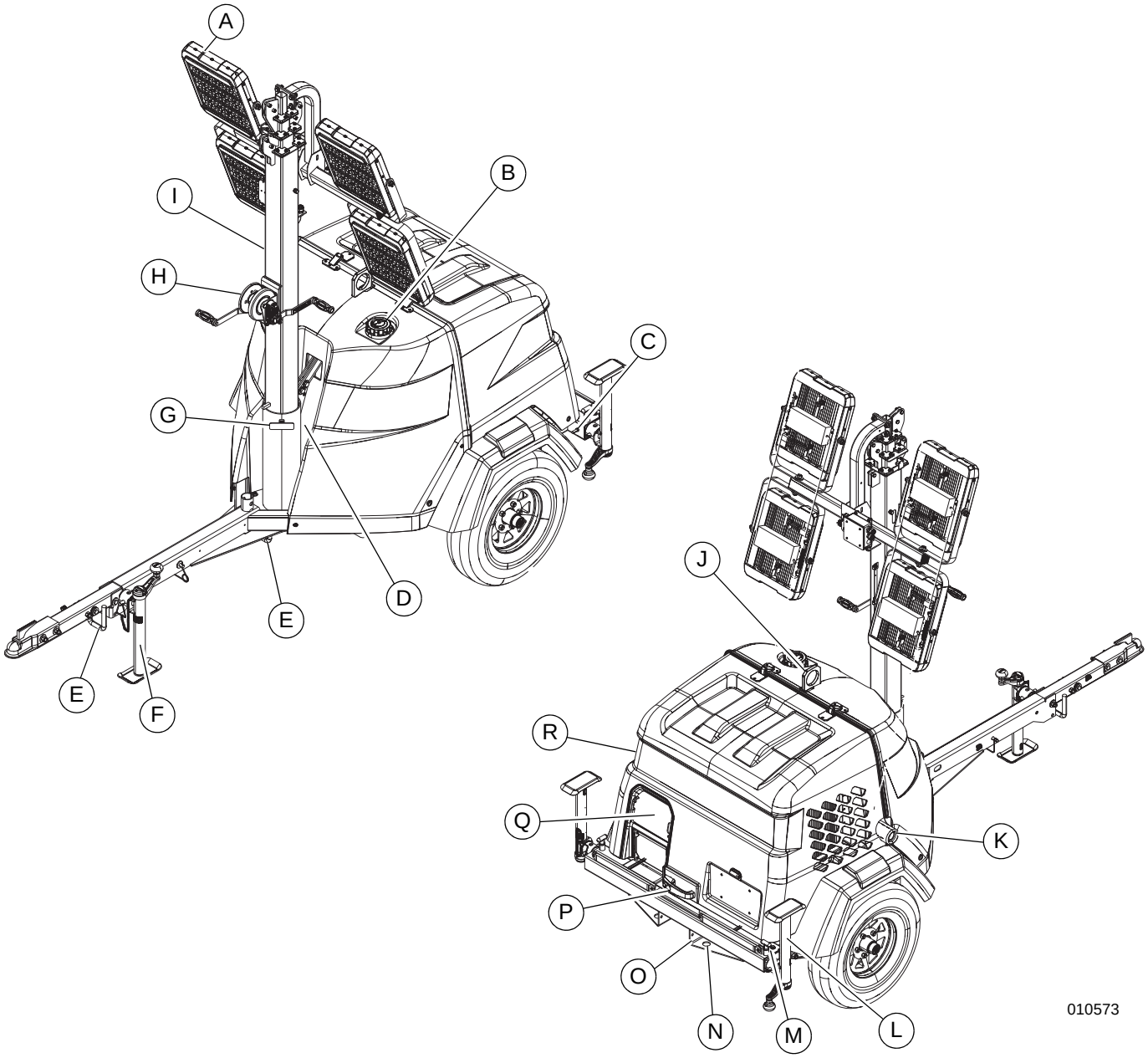

Figure 2-10. Exterior Components

A Light fixture (4 locations)
B Fuel fill port
C Grounding stud
D Dawn-to-dusk sensor (behind mast)
E Tie-down point
F Tongue jack
G Mast rotation knob
H Winch
I Mast
J Unit lift point
K Exhaust
L Outrigger jack (2 locations)
M Outrigger pin (2 locations)
N Rear tie-down point (2 locations)
O Fork pocket (2 locations)
P Hood latch
Q Control panel access door
R Hood

Control Panel

Standard Analog

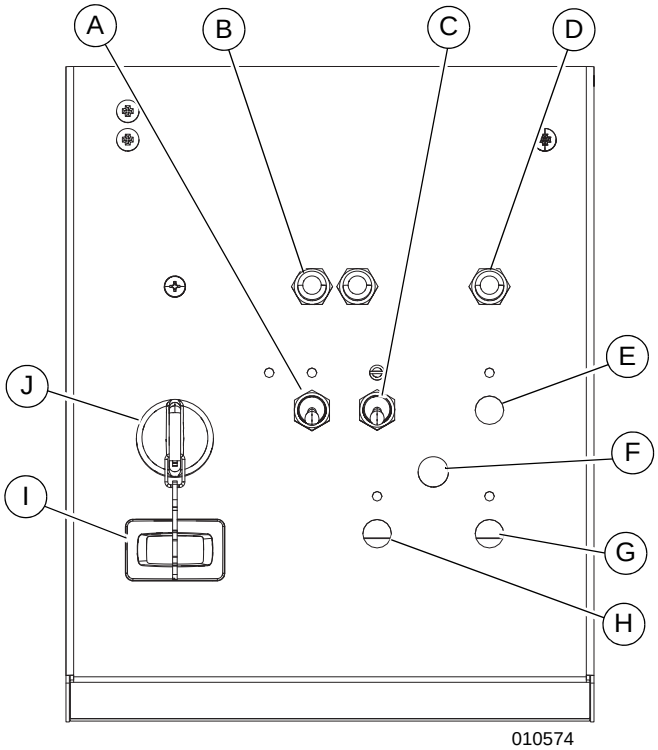

Figure 2-11. Standard Analog Controls

A Main circuit breaker

B DC circuit breaker (2 locations)

C Light fixtures ON-OFF switch
One switch controls power to all light fixtures

D AC circuit breaker
Controls export power (if equipped)

E [not used]

F Manual-winch units: [not used]
Electric-winch units: Mast UP-DOWN switch

G [not used]

H [not used]

I Engine hour meter
Displays how many hours engine has run

J Engine ignition switch

Analog with Import Power (If Equipped)

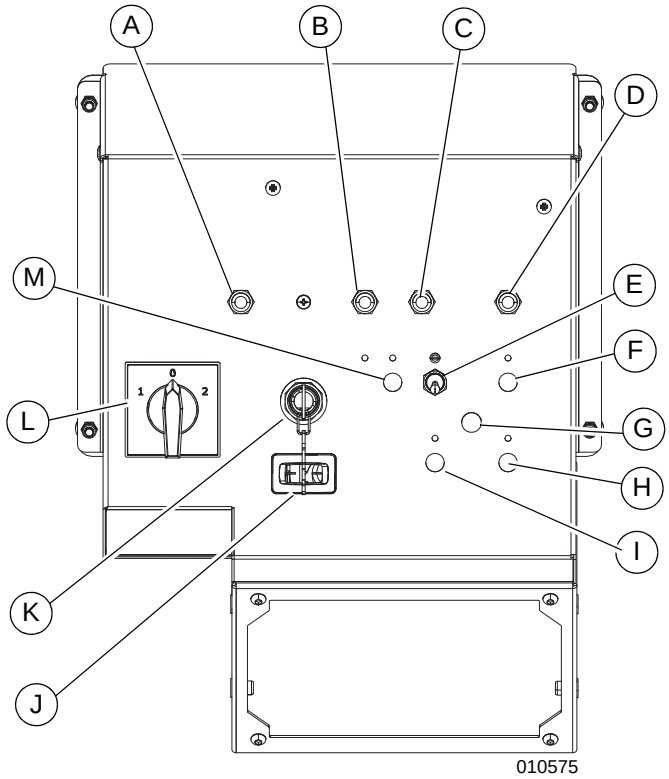

Figure 2-12. Analog Controls With Optional Import Power

A GFCI breaker

B DC circuit breaker

C DC circuit breaker

D AC circuit breaker

E Light switch

F [not used]

G Manual-winch units: [not used]
Electric-winch units: Mast UP-DOWN switch

H [not used]

I [not used]

J Engine hour meter
Displays how many hours engine has run

K Engine ignition switch

L Engine/utility power selector switch (flex switch)

M Main breaker

Power Zone® (If Equipped)

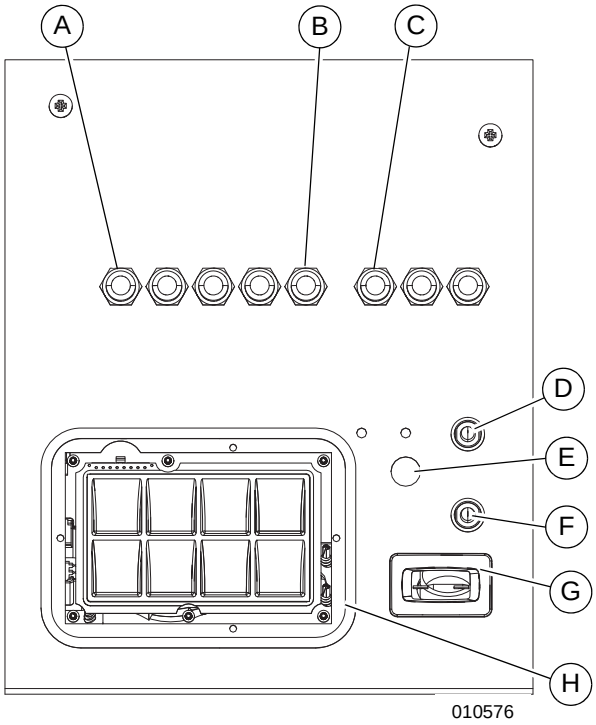

Figure 2-13. Optional Power Zone Controls

A AC circuit breaker—light fixture (4 locations)

B AC circuit breaker
Controls export power (if equipped)

C DC circuit breaker (3 locations)

D Controller power switch

E Main circuit breaker

F Mast UP-DOWN switch (if equipped)

G Engine hour meter
Displays how many hours engine has run

H Power Zone controller

Power Zone with Import Power (If Equipped)

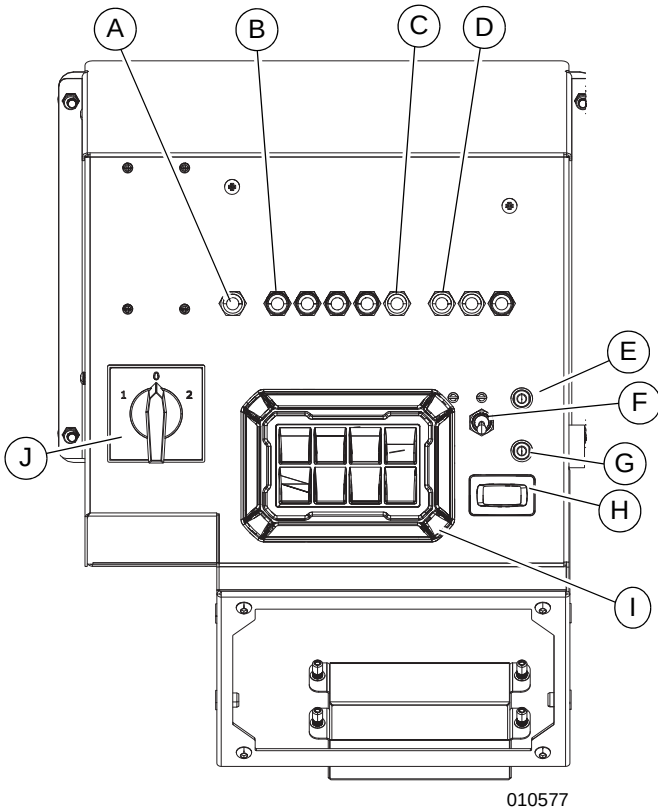

Figure 2-14. Optional Power Zone Controls With Optional Import Power

A GFCI breaker

B AC circuit breaker—light fixture (4 locations)

C AC circuit breaker
Controls export power (if equipped)

D DC circuit breaker (3 locations)

E Controller power switch

F Main circuit breaker

G Mast UP-DOWN switch (if equipped)

H Engine hour meter
Displays how many hours engine has run

I Power Zone controller

J Engine/Utility power selector switch (flex switch)

Power Zone Autolight Controller (If Equipped)

See ***Figure 2-15***. The Power Zone Autolight controller monitors vital unit functions, and indicates operational status and fault conditions.

The controller can be set to automatic (AUTO) mode, in which the lights and engine automatically start and stop according to input from the dusk-to-dawn sensor.

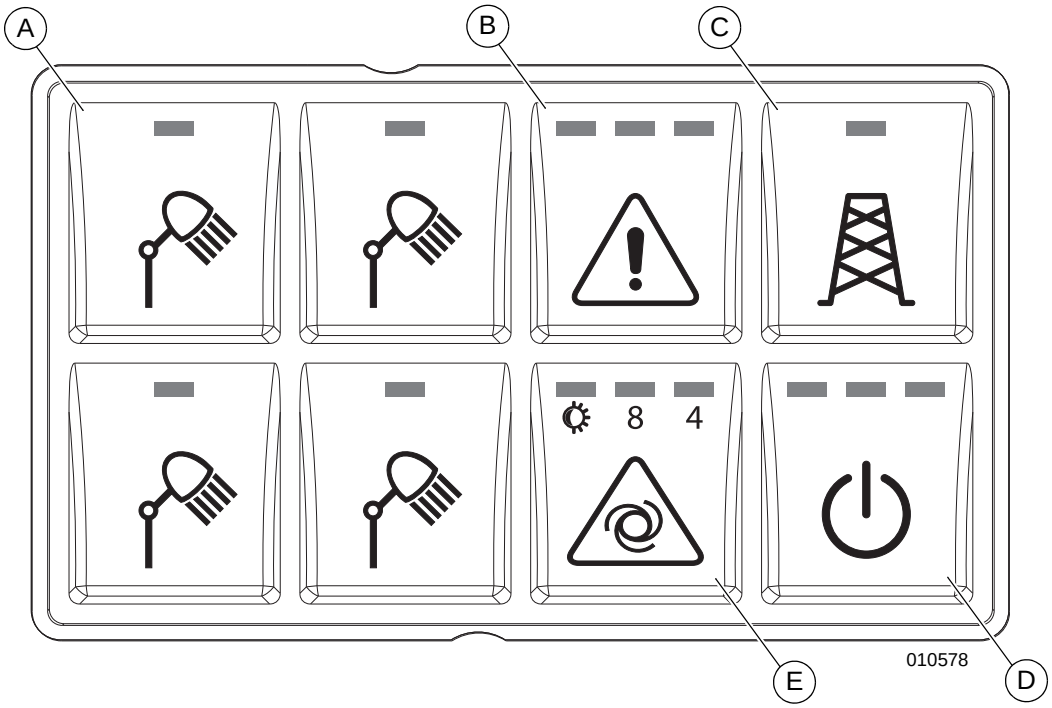

Figure 2-15. Power Zone Autolight Controller

A Light fixture ON-OFF button (4 locations)

B Fault indicator button

C UTILITY mode button

D Engine START-STOP button

E AUTO mode button

(A) Light Fixture ON-OFF Button (4 locations)

See ***Figure 2-16***. These buttons control power to the light fixtures. One button controls one light fixture, as illustrated.

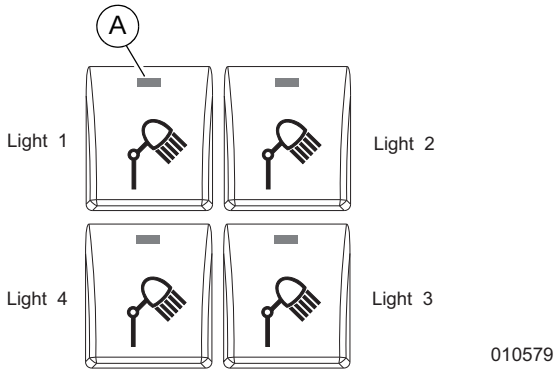

Figure 2-16. Light Fixture ON-OFF Buttons

- Each button contains an LED (A). If an LED is illuminated, the corresponding light fixture is powered.
- Each button is single-push: Press once to switch the corresponding light ON or OFF.

NOTE: If any light does not function as described, see ***Troubleshooting***.

(B) Fault Indicator Button

See ***Figure 2-17***. This button resets faults indicated by the LEDs (A, B, C). To reset a fault, press and hold for 3 seconds.

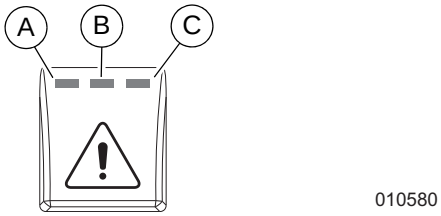

Figure 2-17. Fault Indicator Button

Illuminated LED	Indicates Fault
A	Engine fault
B	Low battery
C	Fail to crank (AUTO mode only)
A and C	Engine overspeed or engine underspeed
B and C	Loss of speed signal

See ***Troubleshooting*** for more information.

(C) UTILITY Mode Button

NOTE: This button only functions in units equipped with UTILITY mode.

See ***Figure 2-18***. This button controls UTILITY mode. Press the button to switch UTILITY mode ON or OFF.

Figure 2-18. UTILITY Mode button

When the LED (A) is illuminated, UTILITY mode is ON.

(D) Engine START-STOP Button

See ***Figure 2-19***. This button controls start-up and shut-down. Press once button to start or stop the engine and generator (genset).

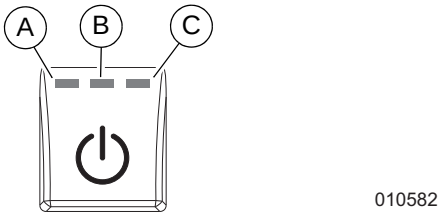

Figure 2-19. Engine START-STOP Button

Illuminated LED	Indicates
A	Unit is starting or running
B	Glow plugs active
C	Engine cranking

(E) AUTO mode button

See ***Figure 2-19***. This button controls whether the unit starts/stops automatically or is operator-controlled. When AUTO mode is active, the unit starts and stops on an operator-defined schedule, as shown below.

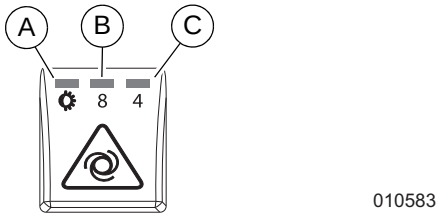

Figure 2-20. AUTO Mode Button

Illuminated LED	Indicates
A	Automatic dusk to dawn
B	Schedule 1: Dusk + 8 hr
C	Schedule 2: Dusk + 4 hr

About UTILITY Mode (If Equipped)

Units equipped with UTILITY mode can provide lighting and 120 V power without running the genset.

Requirements for UTILITY mode are:

- Utility power supply
- 240 V, four-terminal cord

NOTE: In UTILITY mode, the engine does start.

About SLEEP Mode (If Equipped)

Units equipped with Power Zone controls are also equipped with SLEEP mode.

- If controller power is ON, the unit is not running, and no button is pressed for 180 seconds, the controller enters SLEEP mode.
- To wake unit from SLEEP mode, press any button.

Engine Derating

All units are subject to derating for altitude and temperature. Derating reduces the available power for operating tools and accessories connected to the receptacles. For every increase in 1,000 ft (305 m) of elevation, engine performance for this unit typically drops between 2–4%. Also, engine performance decreases about 1% for every 10 °F (5.6 ºC) increase in ambient air temperature over 72 ºF (22 ºC).

This page intentionally left blank.

Unit Setup

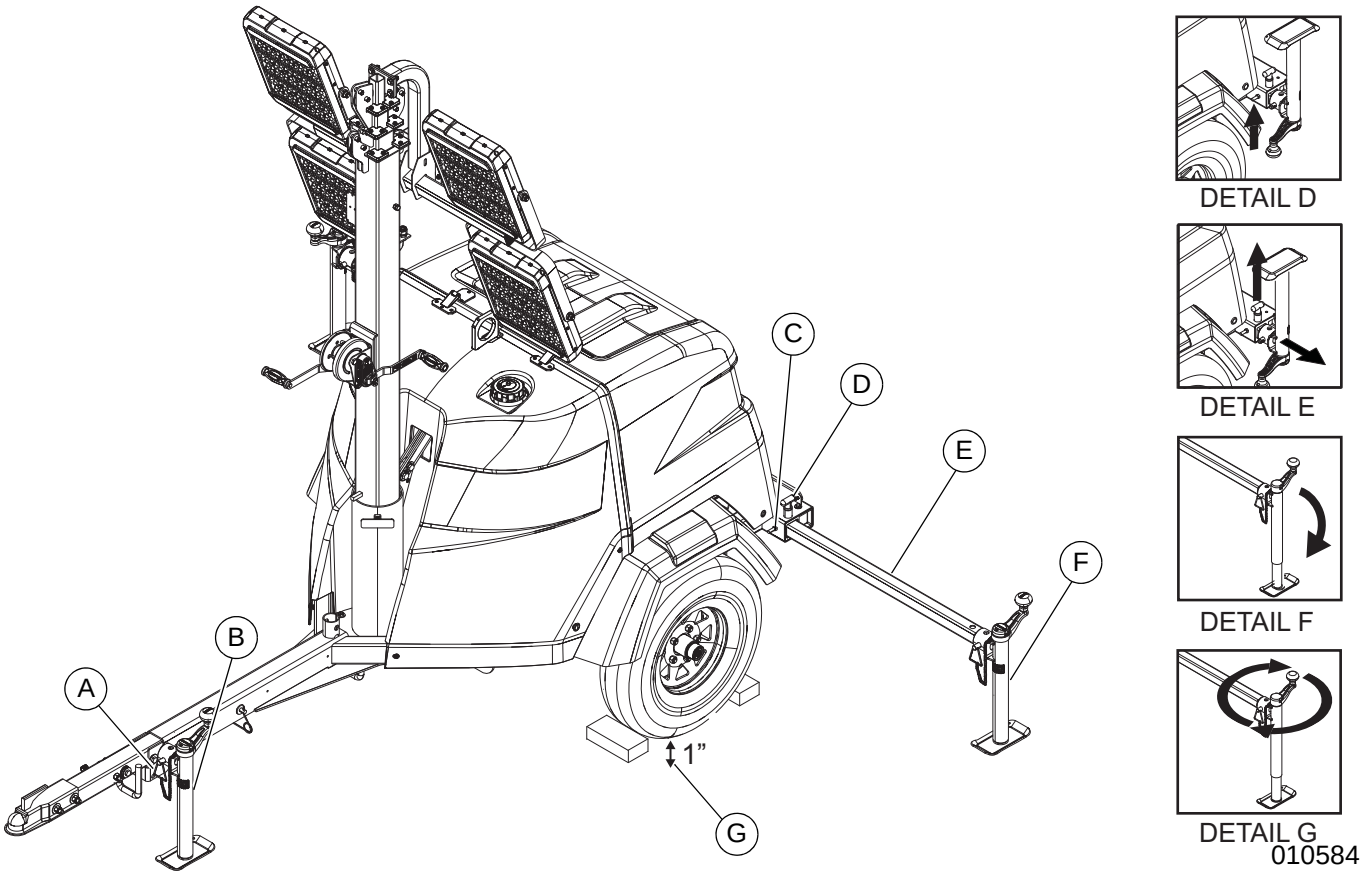

Figure 3-1. Setup Components

DANGER

High Voltage. Verify area above unit is clear of overhead wires and obstructions. Contact with high-voltage power lines will result in death or serious injury. (000260a

WARNING

Do not set up the unit if high winds are expected. High winds can cause the unit to tip or fall, causing severe injury or machine damage. (000297)

1. For maximum light coverage, position the unit at ground level or in a spot higher than the area being illuminated by the lamps.

   NOTE: See ***Component Locations*** for unit height.

2. See ***Figure 3-1***. Place the unit on firm ground that is relatively flat (less than 5° slope), and block the wheels to keep it from moving. This will make it easier to level the unit.
3. Pull the locking pin (A) on the tongue jack (B) and rotate the jack 90°. Install the locking pin. Rotate the jack handle clockwise to raise the trailer tongue off the towing vehicle.
4. A grounding stud (C) is located on the rear frame of the trailer near the left side outrigger. For grounding requirements, follow local, state, and National Electrical Code (NEC) regulations.
5. See Details D–E. Pull the locking pins (D) on the outriggers (E) and pull each outrigger out until the spring loaded locking pin snaps back into place. Pull the locking pin on each outrigger jack (F) and rotate each jack 180° until the jack pad is facing down. Install the locking pin.
6. See detail G. Rotate each jack handle clockwise to start leveling the trailer. Adjust all three jacks by rotating the handles clockwise until they are firmly in contact with the ground. Continue until the wheels are approximately 1 in (2.5 cm) off the ground (G).

7. Before raising the mast, it may be necessary to adjust the lamps. The lamps may be adjusted up, down, left or right by simply aiming them in the desired direction.

Raising the Mast—Manual Winch

⚠DANGER

Electrocution. DO NOT use the unit if electrical cord is cut or worn through. Doing so will result in death or serious injury.
(000263a)

⚠WARNING

Tipping hazard. Extend the outriggers and level the unit before raising the mast. Keep the outriggers extended while the mast is up. Failure to do so could cause the unit to tip and fall and could result in death or serious injury.
(000266)

⚠WARNING

Tipping hazard. Do not extend the mast beyond the colored mark on the second mast section. The unit can become unstable and tip or fall, causing injury.
(000262)

⚠WARNING

Personal Injury. Stop immediately if the mast hangs up or the winch cable develops slack. Excess slack could cause the mast to collapse, resulting in personal injury or equipment damage.
(000265)

⚠WARNING

Personal injury or equipment damage. Do not raise or lower the mast while the unit is operating. Doing so can break the lenses and cause the lamps to shatter.
(000279)

1. Set up and level the unit. See ***Unit Setup***.
2. See ***Figure 3-2***. Inspect the mast cables for excessive wear or damage. Verify the cables are properly centered in each pulley (A). Inspect the electrical cord for damage.
3. Rotate the mast by loosening the mast rotation knob (C) at the bottom of the mast. Turn the mast until the lights face in the desired direction. Tighten the mast rotation knob to secure the mast in position.
4. Using both hands, rotate the winch (B) to slowly extend the mast. Verify the coiled electrical cord is extending at the top sections of the mast. Stop extending the mast when the colored mark (D) on the second mast section is visible as seen in Detail D.

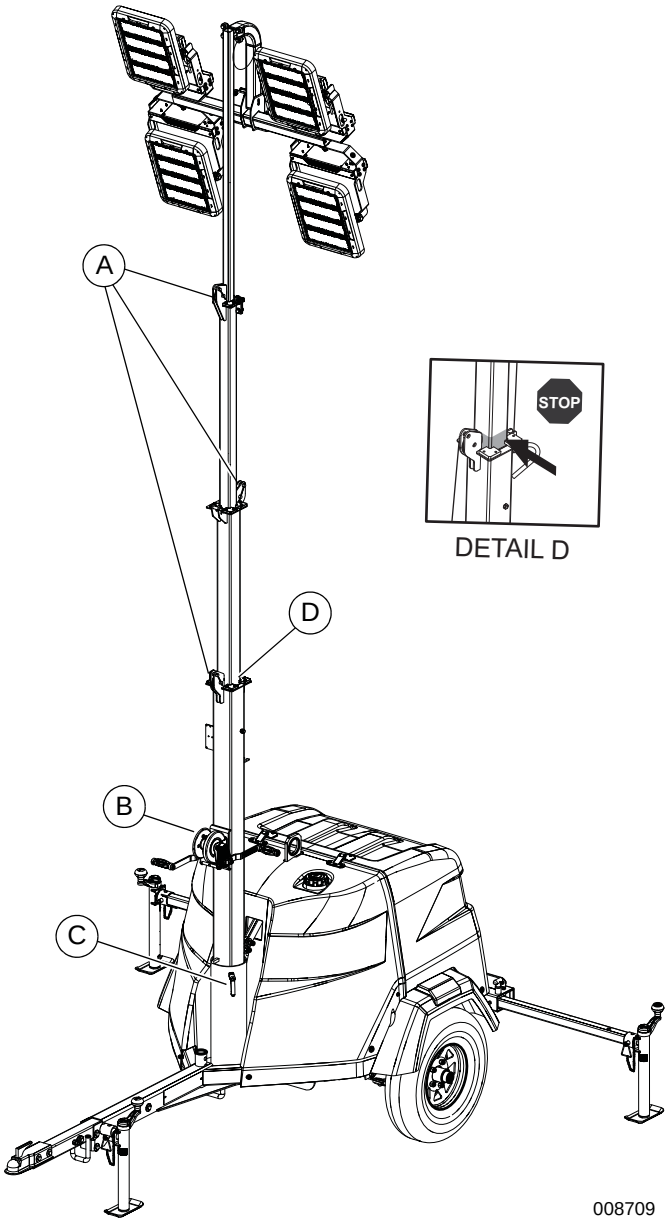

Figure 3-2. Pulley Locations—Manual Winch

IMPORTANT NOTE: Contact a GMASD immediately if the mast hangs up or the winch cable develops slack.

Raising the Mast—Electric Winch (If Equipped)

DANGER

Electrocution. DO NOT use the unit if electrical cord is cut or worn through. Doing so will result in death or serious injury.

(000263a)

WARNING

Tipping hazard. Extend the outriggers and level the unit before raising the mast. Keep the outriggers extended while the mast is up. Failure to do so could cause the unit to tip and fall and could result in death or serious injury.

(000266)

WARNING

Tipping hazard. Do not extend the mast beyond the colored mark on the second mast section. The unit can become unstable and tip or fall, causing injury.

(000262)

WARNING

Personal Injury. Stop immediately if the mast hangs up or the winch cable develops slack. Excess slack could cause the mast to collapse, resulting in personal injury or equipment damage.

(000265)

WARNING

Personal injury or equipment damage. Do not raise or lower the mast while the unit is operating. Doing so can break the lenses and cause the lamps to shatter.

(000279)

1. Set up and level the unit. See ***Unit Setup***.
2. See ***Figure 3-3***. Inspect the mast cables for excessive wear or damage. Verify the cables are properly centered in each pulley (A). Inspect the electrical cord for damage.
3. Rotate the mast by loosening the mast rotation knob at the bottom of the mast (D). Turn the mast until the lights face in the desired direction. Tighten the mast rotation knob to secure the mast in position.

   NOTE: On Key Switch models, key must be in RUN position to operate electric winch.

4. Press and hold the winch control switch (Detail B) upward to telescope the mast to the desired height. While doing so, verify that the coiled electrical cord is extending at the top sections of the mast. Stop extending the mast when the colored mark (C) on the second mast section is visible as seen in Detail C.

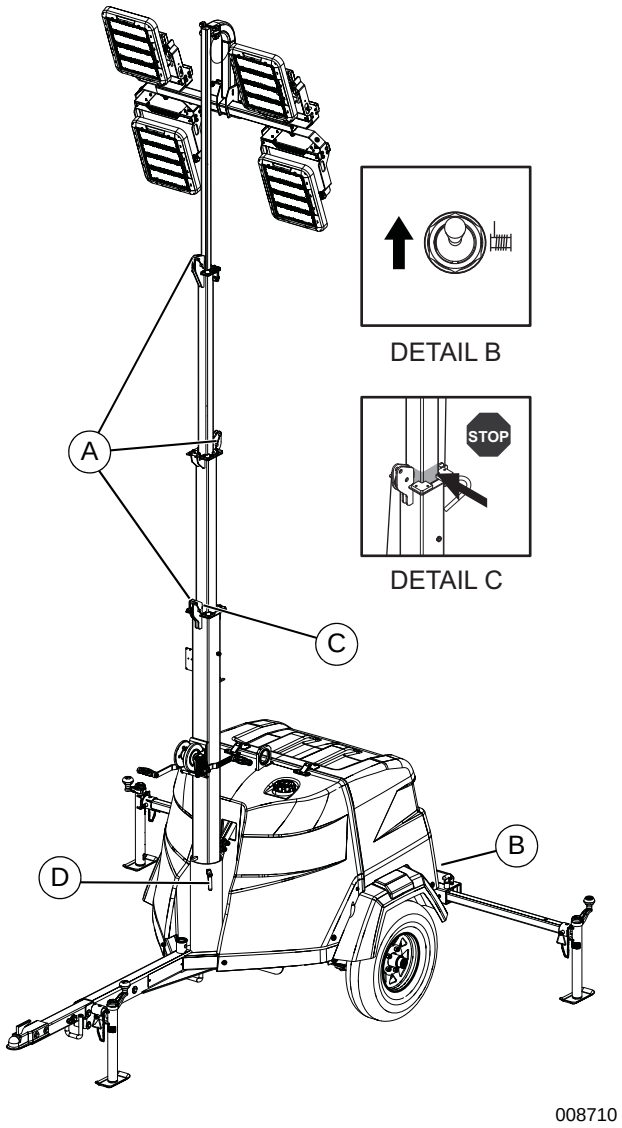

Figure 3-3. Switch & Pulley Locations—Electric Winch

IMPORTANT NOTE: A limit switch on the main mast section will disconnect power to the electric winch to prevent overextending the mast.

IMPORTANT NOTE: Contact a GMASD immediately if the mast hangs up or the winch cable develops slack.

Prestart Checklist

Before starting the unit, all items in the prestart checklist must be completed. This checklist applies to both manual and remote starting of the unit.

WARNING

Consult Manual. Read and understand manual completely before using product. Failure to completely understand manual and product could result in death or serious injury.

(000100a)

- ❒ Verify all maintenance procedures are up to date. For more information, refer to ***General Maintenance*** and ***Basic Maintenance Schedule***.
- ❒ Perform a walk-around inspection. Refer to ***Daily Walk-Around Inspection***.
- ❒ The unit must be level.
- ❒ The unit must be dry. Inspect for water inside or near the unit; dry if needed.
- ❒ For grounding requirements, follow the National Electrical Code (NEC), state, and local regulations.
- ❒ Verify the control power switch is OFF (O).
- ❒ Verify all circuit breakers are OFF (O).
- ❒ Inspect all electrical cords; repair or replace any that are cut, worn, or bare.
- ❒ Verify all winch cables are in good condition and centered on each pulley. Do not use if cables are kinked or beginning to unravel.
- ❒ Check oil, coolant, and fuel levels. For more information, refer to ***General Maintenance***.
- ❒ Verify battery connections are secure.
- ❒ Turn the battery disconnect switch on, if equipped.
- ❒ Inspect the engine fan belt tension and condition.
- ❒ Inspect the engine fan belt guard.
- ❒ Inspect the engine exhaust system for loose or rusted components.
- ❒ Verify all covers are in place and secure.

Starting Unit—Analog Controls

CAUTION

Equipment Damage. Do not continuously crank engine for more than ten seconds. Doing so will lead to overdischarge of batteries and starter seizure.

(000230)

NOTE: If the engine was run out of fuel or the fuel tank was drained, it may be necessary to purge the fuel lines. Refer to the engine operator's manual supplied with the unit.

1. Open unit hood.
2. See ***Figure 3-4***. Switch the flex switch (if equipped) to position 2.

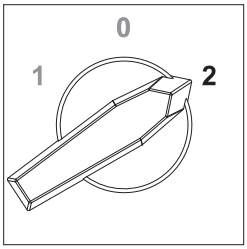

010585

Figure 3-4. Flex Switch—Position 2

3. Close unit hood.
4. See ***Figure 3-5***. Switch lights to OFF (O).

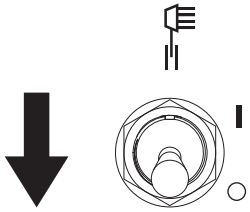

010586

Figure 3-5. Lights OFF (O)

5. See ***Figure 3-6***. Switch main AC circuit breaker to OFF (O).

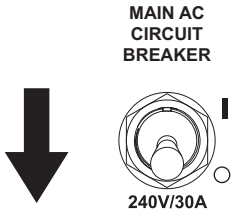

010587

Figure 3-6. Main AC Circuit Breaker OFF (O)

6. See ***Figure 3-7***. Turn ignition switch to GLOW PLUG position and hold for 10 to 15 seconds

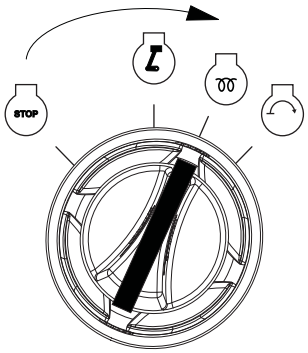

009951

Figure 3-7. Activate Glow Plug

IMPORTANT NOTE: Do not hold ignition switch in GLOW PLUG position for more than 15 seconds.

7. See ***Figure 3-8***. Turn ignition switch to START position and hold (10 seconds maximum) until engine cranks and starts.

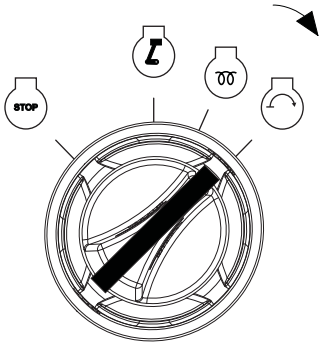

009952

Figure 3-8. Crank Engine

IMPORTANT NOTE: Do not crank engine for more than 10 seconds.

8. See ***Figure 3-9***. Release ignition switch. It moves to the RUN position.

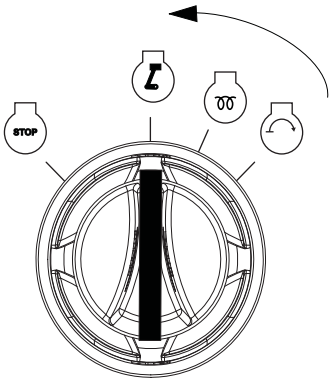

009953

Figure 3-9. Release Key

IMPORTANT NOTE: If unit does not start after 10 seconds of cranking, turn ignition switch to STOP position and wait 30 seconds. Then, repeat steps 6–7 as necessary.

9. Begin using lights and receptacles (if equipped), in accordance with the following:
   - To operate lights, see ***Operating Lights—Analog Controls***.
   - To operate 120 V convenience receptacles, see ***Customer Convenience Receptacles (If Equipped)***.

Starting Unit—Power Zone Controls (MANUAL Mode)

NOTE: If the engine was run out of fuel or the fuel tank was drained, it may be necessary to purge the fuel lines before starting. See the OEM engine manual supplied with the unit.

1. Open unit hood.
2. See ***Figure 3-10***. Switch the flex switch (if equipped) to position 2.

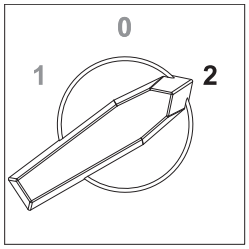

010585

Figure 3-10. Flex Switch—Position 2

3. Close unit hood.
4. See ***Figure 3-11***. Switch controller power to ON (I).

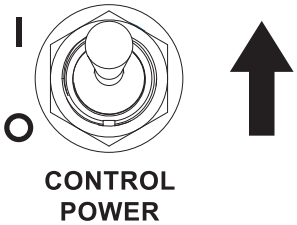

010588

Figure 3-11. Controller Power ON (I)

5. See ***Figure 3-12***. Press the START-STOP button. Wait for engine to start.

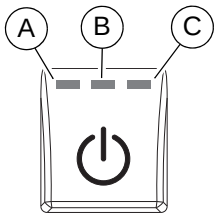

010582

Figure 3-12. Engine START-STOP Button

NOTE: The LEDs (A, B, C) allow the operator to monitor start-up progression. See table below.

A Illuminates when START-STOP button is pushed. Remains illuminated during start-up process and while engine is running.

B Flashes when glow plugs are active.

C Illuminates when engine cranks.

6. Begin using lights and receptacles (if equipped), in accordance with the following:
   - To operate lights, see ***Operating Lights—Power Zone Controls (MANUAL Mode)***.
   - To operate 120 V convenience receptacles, see ***Customer Convenience Receptacles (If Equipped)***.

Starting Unit—Power Zone Controls (AUTO Mode)

1. See ***Figure 3-13***. Switch controller power to ON (I).

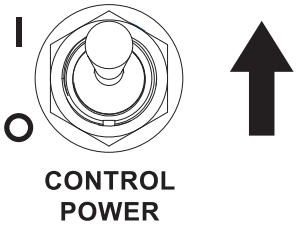

Figure 3-13. Controller Power ON (I)

2. See ***Figure 3-14***. Switch main circuit breaker to ON (I).

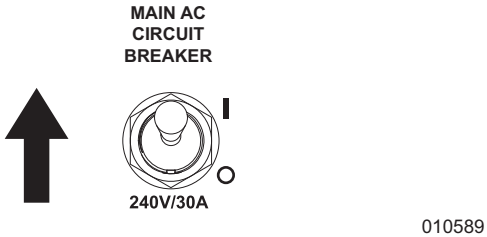

Figure 3-14. Main AC Circuit Breaker ON (I)

3. See ***Figure 3-15***. Press AUTO mode button until desired schedule is active. See ***AUTO Run Scheduling***.

NOTE: Due to function of the schedule, the unit might not start immediately.

AUTO Run Scheduling

AUTO mode requires a schedule for running and shutting off, which the operator must assign.

See ***Figure 3-15***. Three schedules are available. The active schedule is indicated by an illuminated LED on the AUTO mode button.

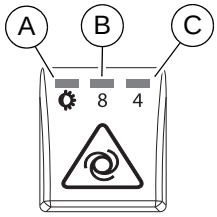

Figure 3-15. AUTO Mode Button—LEDs

A Automatic dusk to dawn.
Engine and lights start and stop in accordance with ambient brightness at the dusk-to-dawn sensor.

B Schedule 1: Dusk + 8 hours.
Eight-hour engine-run/lighting period, starting at dusk. Repeats daily.

C Schedule 2: Dusk + 4 hours.
Four-hour engine-run/lighting period, starting at dusk. Repeats daily.

NOTE: The dusk-to-dawn setting (A) utilizes an adjustable dusk-to-dawn sensor. See ***Dusk-to-Dawn Sensor (If Equipped)***.

Operating Lights—Analog Controls

1. Verify the unit is ON and running smoothly. See ***Starting Unit—Analog Controls***.
2. See ***Figure 3-16***. Switch main circuit breaker to ON (I).

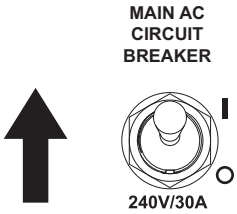

Figure 3-16. Main Circuit Breaker ON (I)

3. See ***Figure 3-17***. Switch lights to ON (I).

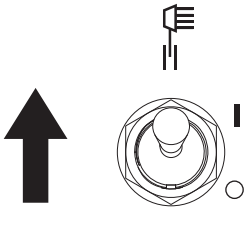

Figure 3-17. Lights ON (I)

Operating Lights—Power Zone Controls (MANUAL Mode)

1. Verify the unit is ON and running smoothly. See ***Starting Unit—Power Zone Controls (MANUAL Mode)***.
2. Switch main circuit breaker to ON (I).
3. See ***Figure 3-18***. Press one or more light ON-OFF buttons.

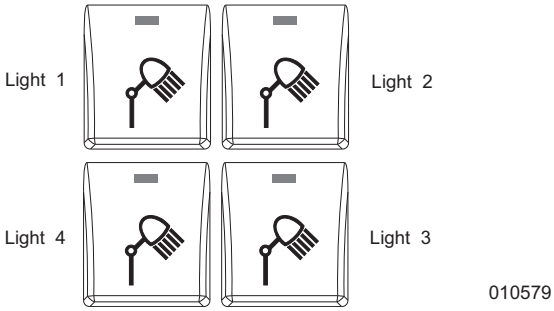

Figure 3-18. Light Fixture ON-OFF Buttons

NOTE: If the main circuit breaker is OFF, the light fixture ON-OFF button LED (A) illuminates but the light fixture does not. Switch main circuit breaker ON.

Figure 3-19. Light Fixture ON-OFF Button

Operating Lights—Power Zone Controls (AUTO Mode)

In AUTO mode, light fixtures automatically switch ON, according to the active schedule. Change which lights switch ON by pressing one or more light ON-OFF buttons (***Figure 3-18***).

Shutting Down Unit—Analog Controls

1. Stop using and unplug equipment from the 120 V convenience receptacles. See ***Removing Loads from Receptacles (If Equipped)***.
2. See ***Figure 3-20***. Switch lights to OFF (O).

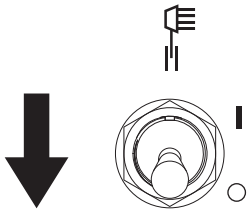

010586

Figure 3-20. Lights Switch

3. See ***Figure 3-21***. Switch main AC circuit breaker to OFF (O).

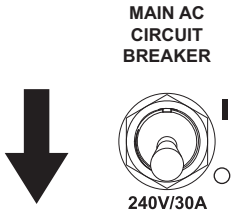

010587

Figure 3-21. Main AC Circuit Breaker OFF (O)

4. See ***Figure 3-22***. Turn ignition switch to STOP position.

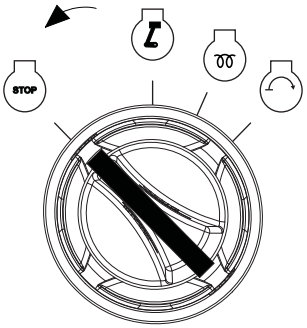

010594

Figure 3-22. Stop Engine

5. Open unit hood.
6. See ***Figure 3-23***. Switch the flex switch (if equipped) to position 0.

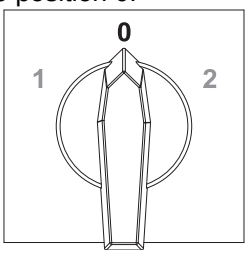

010595

Figure 3-23. Flex Switch—Position 0

7. Close unit hood.

Shutting Down Unit—Power Zone Controls (MANUAL Mode)

1. Remove all loads from receptacles. See ***Removing Loads from Receptacles (If Equipped)***.
2. See ***Figure 3-24***. Switch OFF (O) lights by pressing the light ON-OFF buttons.

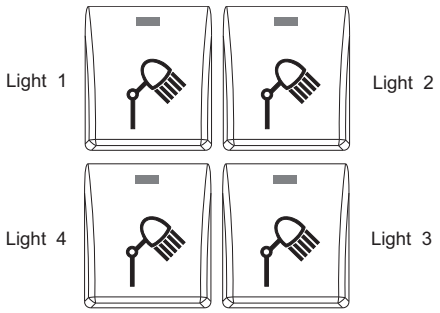

010579

Figure 3-24. Light Fixture ON-OFF Buttons

3. See ***Figure 3-25***. Switch main AC circuit breaker to OFF (O).

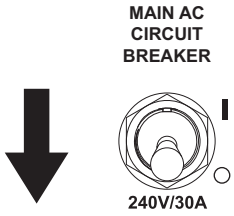

010587

Figure 3-25. Main AC Circuit Breaker OFF (O)

4. See ***Figure 3-26***. Press the engine START-STOP button once.

010582

Figure 3-26. Engine START-STOP Button

NOTE: Engine begins cool-down cycle, shutting off when engine is sufficiently cool.

NOTE: To skip cool-down cycle, press the ENGINE START-STOP button twice instead of once.

5. See ***Figure 3-27***. Switch controller power switch to OFF (O).

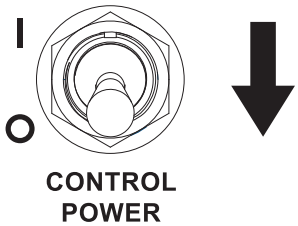

010596

Figure 3-27. Controller Power—OFF (O)

Shutting Down Unit—Power Zone Controls (AUTO Mode)

NOTE: In AUTO mode, the unit automatically shuts down, in accordance with the active schedule.

IMPORTANT NOTE: This procedure cancels AUTO mode and shuts down the unit.

1. Remove all loads from receptacles. See ***Removing Loads from Receptacles (If Equipped)***.
2. See ***Figure 3-38***. Switch lights OFF (O) by pressing the light ON-OFF buttons.

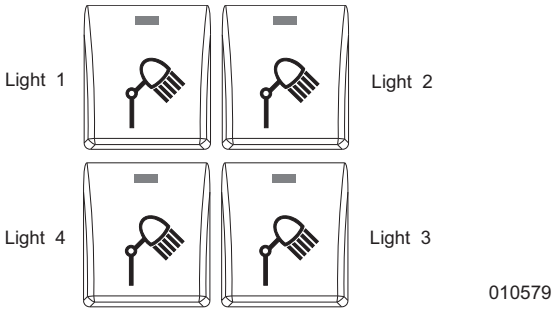

Figure 3-28. Light Fixture ON-OFF Buttons

See ***Figure 3-29***. Press AUTO mode button until all controller LEDs (A, B, and C) are OFF.

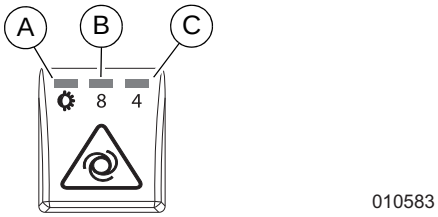

Figure 3-29. AUTO Mode Button—LEDs

3. See ***Figure 3-30***. Switch main AC circuit breaker to OFF (O).

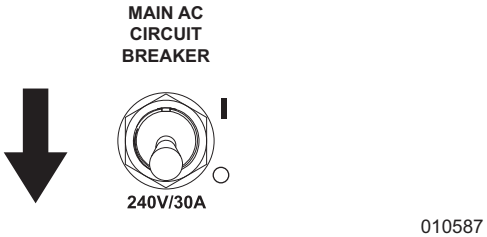

Figure 3-30. Main AC Circuit Breaker OFF (O)

NOTE: See ***Figure 3-31***. Press the engine START-STOP button once.

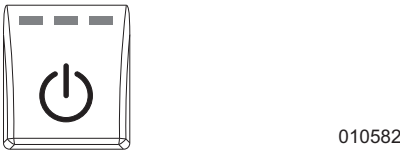

Figure 3-31. Engine START-STOP Button

NOTE: Engine begins cool-down cycle, shutting off when engine is sufficiently cool.

NOTE: To skip cool-down cycle, press the ENGINE START-STOP button twice.

4. See ***Figure 3-32***. Switch controller power switch to OFF (O).

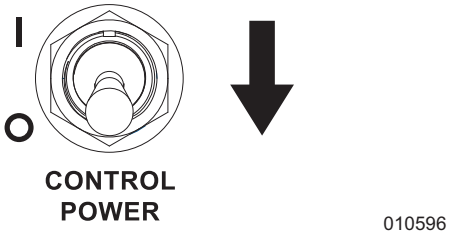

Figure 3-32. Controller Power—OFF (O)

Automatic Shutdown

This unit is equipped with a low oil pressure and high coolant temperature automatic shutdown system. This system automatically shuts off the fuel supply to stop the engine if oil pressure drops too low, or the engine exceeds normal operating temperature. Return the main circuit breaker to STOP to reset the unit after the cause of shutdown has been determined.

Starting Utility Mode (If Equipped)—Analog Controls

1. Shut down the unit (if applicable).
2. Open unit hood.
3. See ***Figure 3-33***. Switch the flex switch (if equipped) to position 0.

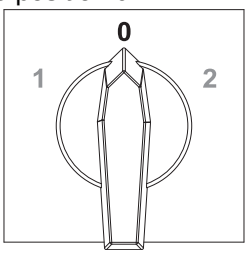

010595

Figure 3-33. Flex Switch—Position 0

4. See ***Figure 3-34***. Switch main AC circuit breaker to OFF (O).

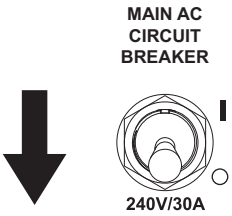

010587

Figure 3-34. Main AC Circuit Breaker OFF (O)

5. See ***Figure 3-35***. Install 240 V, four-terminal cord to unit power inlet port.

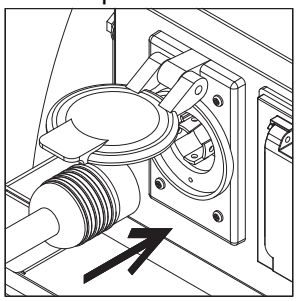

010597

Figure 3-35. Utility Cord Installation to Unit

6. Install 240 V, four-terminal cord to utility power source.
7. See ***Figure 3-36***. Switch the flex switch (if equipped) to position 1.

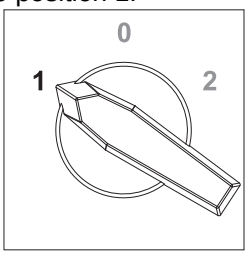

010598

Figure 3-36. Flex Switch—Position 1

8. See ***Figure 3-37***. Switch main circuit breaker to ON (I).

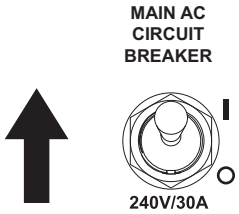

010589

Figure 3-37. Main AC Circuit Breaker ON (I)

9. See ***Figure 3-38***. Switch lights to ON (I).

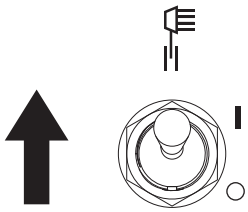

010590

Figure 3-38. Lights ON (I)

10. Begin use of the 120 V convenience receptacles. See ***Customer Convenience Receptacles (If Equipped)***.
11. Close unit hood.

Starting Utility Mode (If Equipped—Power Zone Controls

1. Shut down the unit (if applicable).
2. Open unit hood.
3. See ***Figure 3-39***. Switch the flex switch (if equipped) to position 0.

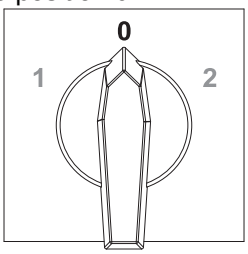

010595

Figure 3-39. Flex Switch—Position 0

4. See ***Figure 3-40***. Switch main AC circuit breaker to OFF (O).

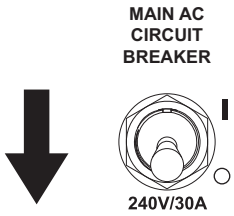

010587

Figure 3-40. Main AC Circuit Breaker OFF (O)

5. See *Figure 3-41*. Switch controller power to OFF (O).

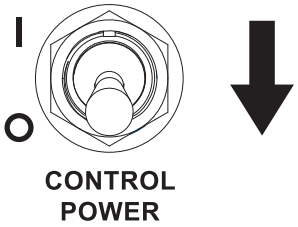

Figure 3-41. Controller Power OFF (O)

6. See *Figure 3-42*. Install 240 V, four-terminal cord to unit power inlet port.

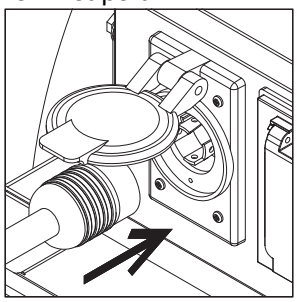

Figure 3-42. Utility Cord Installation to Unit

7. Install 240 V, four-terminal cord to utility power source.
8. See *Figure 3-43*. Switch the flex switch (if equipped) to position 1.

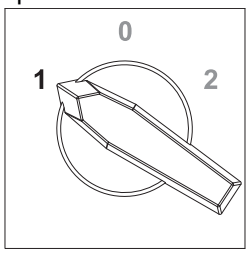

Figure 3-43. Flex Switch—Position 1

9. See *Figure 3-44*. Switch controller power to ON (I).

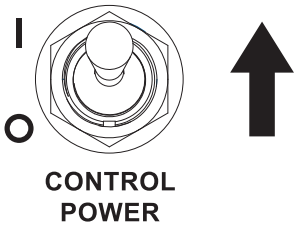

Figure 3-44. Controller Power ON

10. See *Figure 3-45*. On controller, activate utility mode by pushing the Utility Mode button.

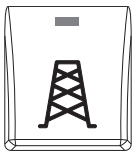

Figure 3-45. Utility Mode Button

NOTE: When utility mode is activated, the LED (A) switches on.

11. See *Figure 3-46*. Switch main circuit breaker to ON (I).

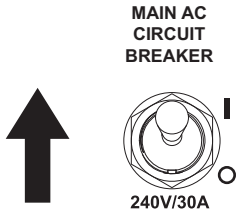

Figure 3-46. Main AC Circuit Breaker ON (I)

12. See *Figure 3-47*. Switch lights ON (I) by pressing the light ON-OFF buttons.

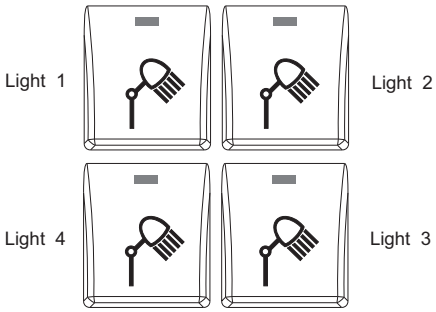

Figure 3-47. Light Fixture ON-OFF Buttons

13. Begin use of the 120 V convenience receptacles. See *Customer Convenience Receptacles (If Equipped)*.
14. Close unit hood.

Stopping Utility Mode (If Equipped)—Analog Controls

1. Open unit hood.
2. Remove all loads from receptacles. See *Removing Loads from Receptacles (If Equipped)*.
3. See *Figure 3-48*. Switch lights to OFF (O).

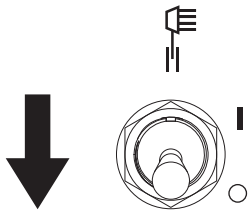

Figure 3-48. Lights OFF (O)

4. See *Figure 3-49*. Switch main AC circuit breaker to OFF (O).

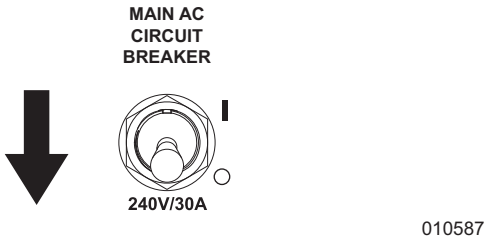

Figure 3-49. Main AC Circuit Breaker OFF (O)

5. See *Figure 3-50*. Switch the flex switch (if equipped) to position 0.

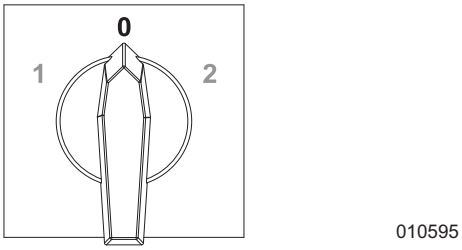

Figure 3-50. Flex Switch—Position 0

6. See *Figure 3-51*. Remove 240 V, four-terminal cord from unit power inlet port.

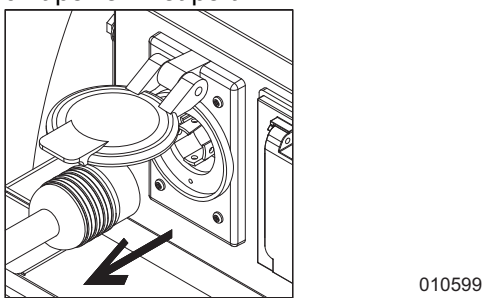

Figure 3-51. Utility Cord Removal from Unit

7. Close unit hood.

Stopping Utility Mode (If Equipped)—Power Zone Controls

1. Open unit hood.
2. Remove all loads from receptacles. See *Removing Loads from Receptacles (If Equipped)*.
3. See *Figure 3-52*. Switch lights OFF (O) by pressing the light ON-OFF buttons.

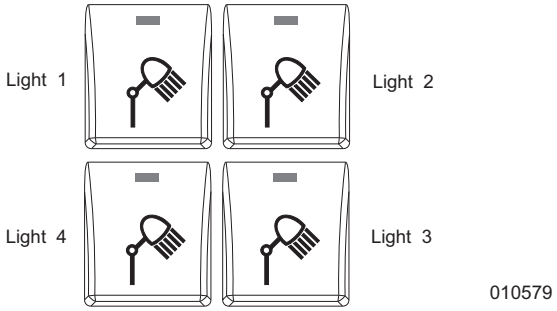

Figure 3-52. Light Fixture ON-OFF Buttons

4. See *Figure 3-53*. Switch main AC circuit breaker to OFF (O).

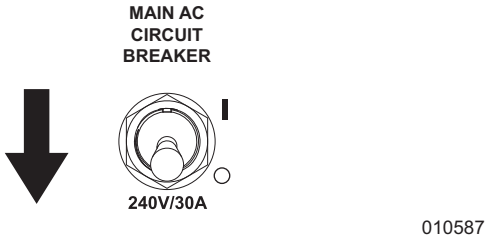

Figure 3-53. Main AC Circuit Breaker OFF (O)

5. See *Figure 3-54*. On controller, deactivate utility mode by pushing the Utility Mode button.

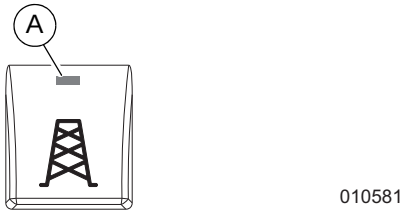

Figure 3-54. Utility Mode Button

NOTE: When utility mode is deactivated, the LED (A) is OFF.

6. See *Figure 3-55*. Switch controller power to OFF (O).

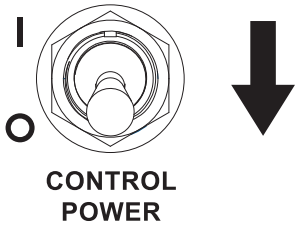

Figure 3-55. Controller Power Switch

7. See ***Figure 3-56***. Switch the flex switch (if equipped) to position 0.

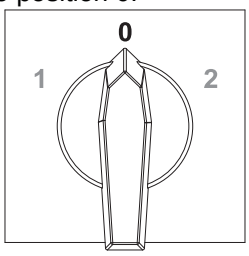

010595

Figure 3-56. Flex Switch—Position 0

8. See ***Figure 3-57***. Remove 240 V, four-terminal cord from unit power inlet port.

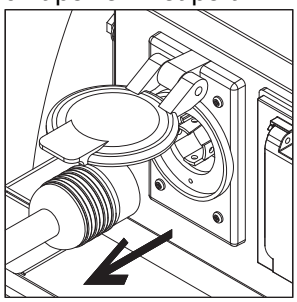

010599

Figure 3-57. Utility Cord Removal from Unit

9. Close unit hood.

Dusk-to-Dawn Sensor (If Equipped)

See ***Figure 3-58***. Units equipped with Power Zone Autolight controller are also equipped with a *dusk-to-dawn sensor* (A), which senses light and accordingly starts and stops the unit.

The sensor's perception of dusk and dawn can be adjusted, due to an adjustable light-shield equipped near the sensor.

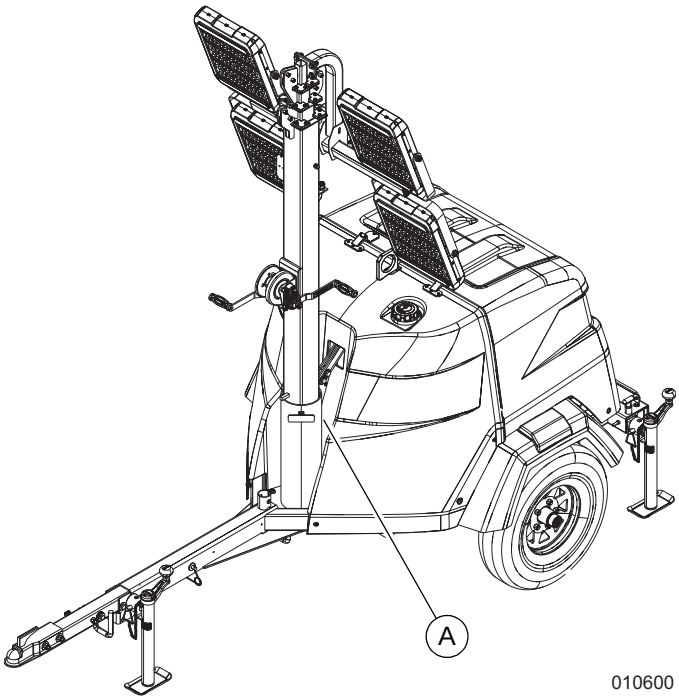

010600

Figure 3-58. Sensor, Shield Located Behind Mast

NOTE: The dusk-to-dawn sensor is only used when the controller is in AUTO mode and the active schedule is *Dusk to Dawn*.

Preparing Sensor for Use

Perform the following procedure at the time of day you want the lights to switch on.

1. Verify controller is in AUTO mode and the active schedule is *Dusk to Dawn*. See ***Starting Unit—Power Zone Controls (AUTO Mode)***.
2. Loosen screws on light shield.
3. Slide the light-shield up, decreasing the sensor's exposure to light, until the lights turn on.
4. Tighten screws on light shield.

Customer Convenience Receptacles (If Equipped)

See ***Figure 3-59***. The unit may be equipped with a 120V, 20 A, GFCI, duplex receptacle; for powering accessories or tools.

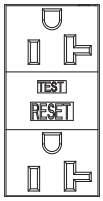

010601

Figure 3-59. Customer Convenience Receptacles

The receptacles, and a corresponding circuit breaker, are located on the control panel. See ***Figure 2-11***.

The receptacles are operable when the engine is running and the main circuit breaker is ON (I).

Load Limit and Overload

- Lights on: Load limit = 1,100 W
- Lights off: Load limit = 1,200 W

Drawing more than the load limit overloads the generator, resulting in main circuit breaker trip. If the breaker trips, switch off the lights and remove some load from the receptacle.

Removing Loads from Receptacles (If Equipped)

When shutting down the unit, remove loads from receptacles as follows.

1. Notify personnel using unit-supplied power that shutdown is pending.
2. Verify shutdown will not create hazards (by turning off equipment that needs to remain running, such as pumps and compressors).
3. Remove loads from receptacles.

Storing the Unit

Disconnect the battery if the unit will be stored for an extended period. Refer to the engine operator's manual for additional extended storage procedures.

Lowering the Mast—Manual Winch

1. Shut down the lights and engine. See ***Shutting Down Unit—Analog Controls***.
2. Lower the mast.
3. Use the winch handles to collapse the mast to its lowest position. Verify the electrical cord does not get caught in, or pinched by, the mast while it is being lowered.

⚠WARNING

Personal Injury. Stop immediately if the mast hangs up or the winch cable develops slack. Excess slack could cause the mast to collapse, resulting in personal injury or equipment damage. (000265)

IMPORTANT NOTE: Contact a GMASD immediately if the mast hangs up or the winch cable develops slack.

4. See ***Figure 3-60***. If the unit is going to be moved, rotate the mast so the lights face the rear of the unit.

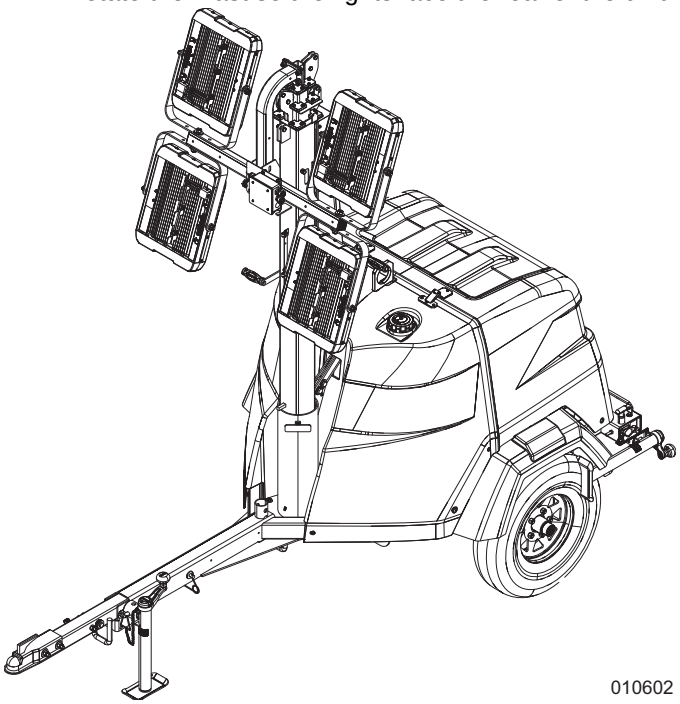

010602

Figure 3-60. Stowed (Travel) Position

To rotate the mast:

a. Loosen the mast rotation knob.
b. Rotate the mast until the white arrows are aligned and the metal stop tabs are touching.
c. Tighten the mast rotation knob.

Lowering the Mast—Electric Winch (If Equipped)

NOTE: On key switch models, key must be in RUN to operate electric winch.

1. Press and hold the upper winch control switch downward to collapse the mast to its lowest position. Verify the electrical cord does not get caught in, or pinched by, the mast while it is being lowered.
2. Shut down the engine. See ***Shutting Down Unit—Analog Controls***.
3. If the unit is going to be moved, rotate the mast so the lights face the rear of the unit. To rotate the mast:
   a. Loosen the mast rotation knob.
   b. Rotate the mast until the white arrows are aligned and the metal stop tabs are touching.
   c. Tighten the mast rotation knob.

NOTE: The electric winch models are equipped with a safety limit switch. This switch disconnects power to the winch after the mast is completely raised or lowered. This prevents the cable from continuing to unwind and becoming entangled around the winch drum.

⚠WARNING

Personal Injury. Stop immediately if the mast hangs up or the winch cable develops slack. Excess slack could cause the mast to collapse, resulting in personal injury or equipment damage. (000265)

IMPORTANT NOTE: Contact a GMASD immediately if the mast hangs up or the winch cable develops slack.

NOTE: If the light tower is not operational, and the batteries do not have enough power to lower the mast, it may be necessary to lower the mast manually. Always attempt to recharge the batteries and lower the mast electrically before proceeding.

Manually Lowering Electric Mast

IMPORTANT NOTE: Do not use this procedure unless it is absolutely necessary. Frequent use of this procedure could damage the motor shaft.

1. See ***Figure 3-61***. Remove the motor cover (A).

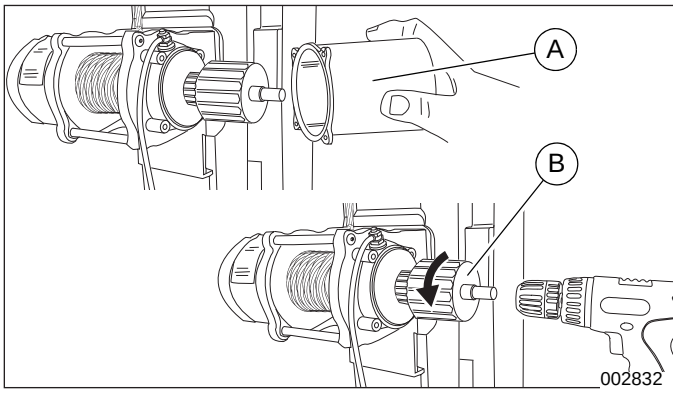

Figure 3-61. Manually Lowering the Mast

2. Attach a drill chuck firmly to the exposed motor shaft (B).
3. Using the drill, slowly rotate the motor shaft counterclockwise to lower mast.
4. Detach the drill chuck and install the motor cover after the mast is completely lowered.

Positive Air Shutdown (PAS) (If Equipped)

See ***Figure 3-62***. This unit may be equipped with a positive air shutdown (A) on the air intake. The PAS system automatically stops the engine if an overspeed is detected. Engine overspeed can occur if the atmosphere contains elevated levels of combustible propane or natural gas.

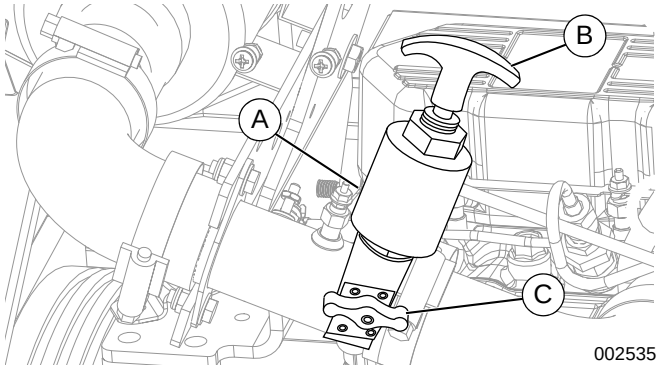

Figure 3-62. Positive Air Shutdown

The PAS system stops the engine by closing an internal valve and obstructing intake air. Shutdown is triggered automatically by an output from the controller or manually by pulling the T-handle (B).

The reset knob (C) rotates 90° to block airflow. If the knob is parallel to the pipe centerline (as shown), the valve is open. If the knob is perpendicular to the pipe centerline, the valve is closed and airflow is blocked.

Test the PAS

Test the PAS at least once a month to ensure optimal valve performance. There are two methods:

1. Pull the T-handle. (**NOTE**: The valve must be open before testing.)
2. Press the emergency stop button.

Testing the PAS triggers an actuator, closing the butterfly valve inside the valve body. An audible click can be heard when the actuator engages. Confirm that the valve is closed by verifying that the knob has rotated perpendicular to the pipe centerline. If valve does not close, contact Generac Mobile Technical Support.

Reset the PAS

IMPORTANT NOTE: Before resetting the PAS, turn the control power switch OFF (O). This will prevent unexpected engine start-up during the procedure.

1. Rotate the reset knob and hold it in place while pulling the T-handle until reset knob rotates counterclockwise into plunger detent. An audible “click” indicates the reset knob has seated properly.
2. Verify that the reset knob is parallel to the intake pipe centerline.
3. Release T-handle, and then release reset knob. The reset knob should remain parallel to the intake pipe centerline.

Lower Radiator Hose Heater (If Equipped)

The lower radiator hose heater is designed to prevent engine coolant from freezing in extreme cold weather conditions. While the heater is designed to be operated overnight if necessary, 2–5 hours of heating just prior to starting is usually sufficient for proper engine starting.

NOTE: Use the lower radiator hose heater only in its designated location. Incorrect use can damage the engine.

Proceed as follows when operating a unit equipped with a lower radiator hose heater.

1. Verify the unit is level to maintain correct orientation of the heater while it is in operation.
2. Verify the cooling system is full of the correct mixture of water and engine coolant before each heater use.
3. Use only an undamaged, outdoor rated, three-prong grounded 120VAC extension cord with a minimum amperage rating of 10A. Connect the cord to a properly grounded 120VAC GFCI outlet.
4. Before starting the engine, unplug the extension cord from the power first, then unplug the heater cord set from the extension cord.

Tandem Tow (If Equipped)

See ***Figure 3-63***. The tandem tow hitch option (A) allows the operator to tow a second MLTS Light Tower in series behind the unit equipped with the hitch.

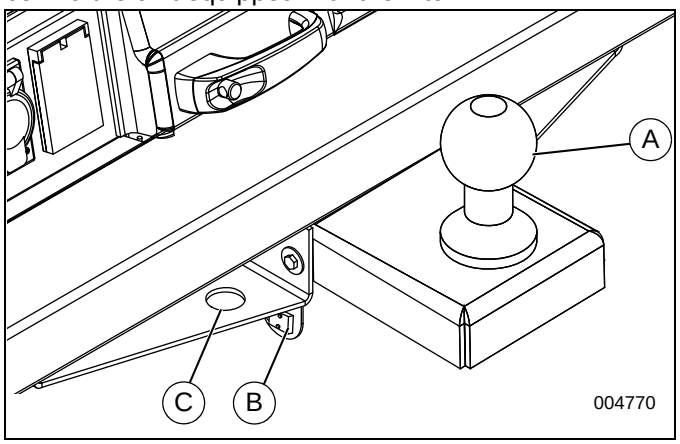

Figure 3-63. Tandem Tow

IMPORTANT NOTE: Never tow more than two units at once.

- Connect any trailer wiring to the unit in front (B). Inspect for proper operation of the directional and brake lights.
- Connect the towing chains to the tie down locations (C).
- Avoid sharp turns when towing. **Do not** cross any obstacles more than 12 in (30.5 cm) deep.
- Tandem tow speeds:
  a. Paved highway—45 mph (72 km/h)
  b. Graded gravel—25 mph (40 km/h)
  c. Cross country—10 mph (16 km/h)

Telemetry (If Equipped)

The digital telemetry option enables the operator to remotely monitor the unit fuel level. A transmitter inside the engine compartment sends real time equipment status information to the user via cellular or satellite connection.

Spark Arrester (If Equipped)

A spark arrester, installed on the unit exhaust, may be required by code in certain municipalities. Contact the local authority having jurisdiction to determine if a spark arrester must be installed on the unit before operation.

Heated Fuel Filter (If Equipped)

See ***Figure 3-64***. An optional heated fuel filter (A) prevents diesel fuel from gelling in extremely cold temperatures. Heating cycles are automatically controlled by the Power Zone Autolight.

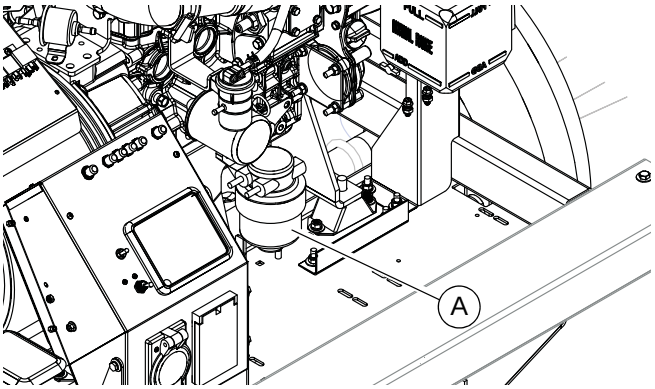

Figure 3-64. Heated Fuel Filter

Towing the Unit

Once the engine is shut down and the mast and lights are correctly stowed, proceed as follows to prepare the unit for towing.

1. Raise the outrigger jacks completely and release the locking pins to rotate them up into the travel position. Verify the locking pins snap into place. Release the outrigger locking pins and slide the outriggers into the trailer frame until the locking pins snap into place.
2. Use the tongue jack to raise or lower the trailer onto the hitch of the towing vehicle. Lock the hitch coupling and attach the safety chains or cables to the vehicle. Remove the tongue jack locking pin and rotate the jack into the travel position. Replace the locking pin.
3. To ensure correct operation of the jacks, refer to ***Trailer Wheel Bearings***. For maintenance interval information, refer to ***Basic Maintenance Schedule***.
4. Connect any trailer wiring to the tow vehicle. Inspect for correct operation of the directional and brake lights.
5. Verify the enclosure is correctly latched.
6. Check for correct inflation of the trailer tires. For maximum tire pressures, refer to ***Specifications***.
7. See ***Figure 3-65***. Inspect the wheel lugs. Tighten or replace any lugs that are loose or missing. If a tire has been removed for axle service or replaced, tighten the lugs, in the order shown, to the following specifications:

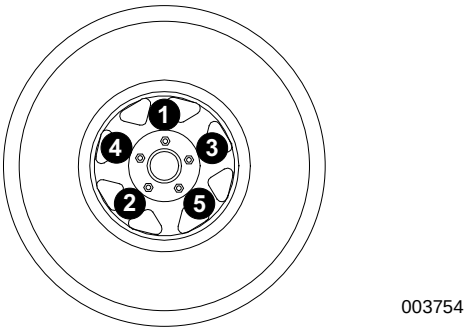

Figure 3-65. Tightening Wheel Lugs

   a. Start all lug nuts by hand.
   b. First pass: tighten to 20-25 ft-lbs (27-33 Nm).
   c. Second pass: tighten to 50-60 ft-lbs (67-81 Nm).
   d. Third pass: tighten to 90-120 ft-lbs (122-162 Nm).

NOTE: After the first road use, torque the lug nuts in sequence.

8. Maximum recommended speed for highway towing is 45 mph (72 km/h). Recommended off-road towing speed is not to exceed 10 mph (16 km/h) or less, depending on the terrain.

Lifting the Unit

Proceed as follows to prepare the unit for lifting:

1. Verify the equipment being used to lift the unit is in good condition and has sufficient capacity. For approximate weights, refer to ***Specifications***.
2. Close and lock all hoods and doors.
3. See ***Figure 3-66***. Stow the mast and lights in the travel position as shown.
4. Always remain aware of people and objects around the unit while preparing, maneuvering, and lifting the unit.

- When lifting the unit, attach any slings, chains, or hooks directly to the central lift point (A). The central lift point is located on top of the enclosure, connected to a lift structure inside the unit.

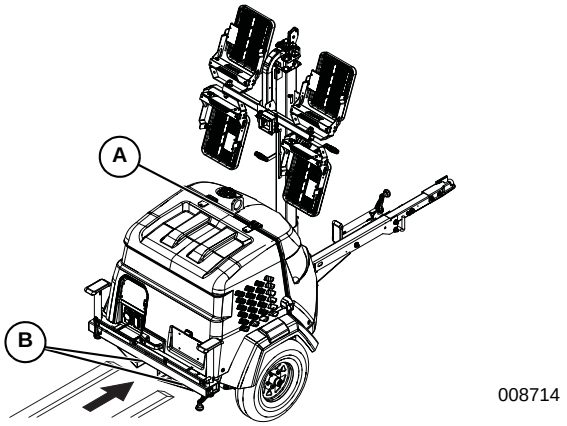

Figure 3-66. Lifting Points

- Use the forklift pockets (B) with care. Lift directly from the rear. Avoid approaching the unit at an angle, as this can permanently damage the forklift pockets, tires, or cabinet. Verify any obstructions are clear of the forklift tines before lifting.

Tying Down the Unit

When securing the unit for transportation, verify the equipment being used to fasten the unit is in good condition and has sufficient strength to hold the unit in place during transport.

See ***Figure 3-67***. Use the tie-down points (C) as shown.

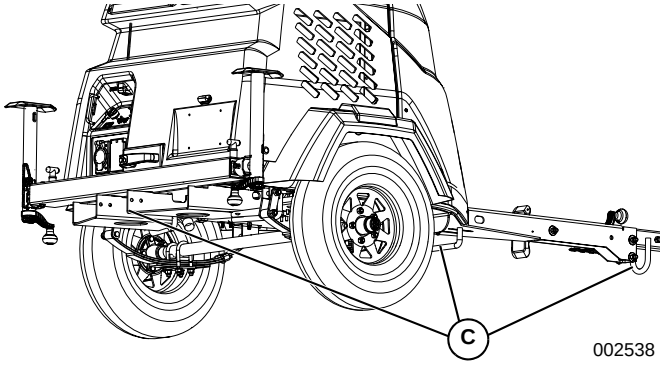

Figure 3-67. Tie-Down Points

Section 4: Maintenance

Emissions Information

For warranty information, please refer to the diesel engine manual supplied with this unit.

Daily Walk-Around Inspection

⚠CAUTION

Equipment Damage. Failure to perform a daily inspection could result in damage to the unit.

(000306)

Perform a walk-around inspection of the unit every day before starting the unit. Look for conditions that could hinder performance or safety, such as (but not limited to):

- Oil, coolant, and fuel leakage
- Blocked vents
- Loose or missing hardware
- Loose or broken electrical connections

Inspect the fan belt for cracks, fraying, or stretching. Verify the belt is correctly seated in the pulley grooves. Replace the belt according to the manufacturer's recommendations.

General Maintenance

Poorly maintained equipment can become a safety hazard. In order for the equipment to operate safely and correctly over a long period of time, periodic maintenance and occasional repairs are necessary. **DO NOT** perform routine service (oil and filter changes, cleaning, etc.) unless all electrical components are shut off.

Regular maintenance will improve performance and extend engine/equipment life. Generac Mobile recommends that all maintenance work be performed by a GMASD. Regular maintenance, replacement or repair of the emissions control devices and systems may be performed by any repair shop or person of the owner's choosing. However, to obtain emissions control warranty service free of charge, the work must be performed by a GMASD or authorized Mitsubishi® engine dealer depending on the repair. See the emissions warranty.

Preparing for Service

Before servicing the unit, always follow the instructions listed below.

1. If unit is equipped with the Power Zone controller, verify the main circuit breaker is OFF. Otherwise, verify the key switch is OFF.
2. Verify the circuit breakers are switched OFF (O).
3. Disconnect the negative (–) terminal on the battery.
4. Attach a "Do Not Start" sign to the control panel to signify that the unit is being serviced and reduce the chance of unauthorized use.

Cleaning the Unit

⚠CAUTION

Equipment damage. Never spray water to clean unit. Do not introduce water into generator widings, terminals, or fuel system during the cleaning process. Doing so will result in equipment damage.

(000325a)

Always clean the unit after each use to remove dust, grease, mud, or spilled fuel or oil. Use soft, clean rags to wipe the cabinet exterior and control panel. Low-pressure compressed air (less than 40 psi [276 kPa]) can also be used to remove dust and debris from the cabinet interior.

This unit contains sensitive electronic components that can be damaged by high pressure and heat. **Do not**:

- wash the unit with a high pressure hose or power washer.
- wash the engine block or fuel tank with a power washer or steam cleaner. Water may enter the cabinet and collect in the generator windings or other electrical parts, causing damage.

Inspecting the Unit

- If the unit is stored outside, inspect for water inside the cabinet and generator before each use. If wet, dry the unit thoroughly before starting.
- Inspect condition of electrical cords. **DO NOT** use the unit if insulation is cut or worn through.
- Verify winch cables are in good condition and centered on each pulley. **DO NOT** use a cable that is kinked or starting to unravel.
- Verify the wheel lugs are present and correctly tightened. Refer to ***Towing Safety***.
- Check the coolant level daily by inspecting the level in coolant overflow jug located near the radiator. Refer to the engine operator's manual for coolant recommendations and proper mixture. Normal operating level is between the 'full' and 'add' markings on the overflow jug.
- After engine is stopped and completely cool, coolant may be added directly to the coolant overflow jug.
- Check the oil level daily. Refer to the engine operator's manual for the appropriate oil specification.
- Verify the oil is correct for special operating conditions such as a change in season or climate.

- **DO NOT** start the unit if the engine oil level is below the ADD mark on the dipstick.
- Normal operating level is in the cross-hatch pattern between the full and add markings on the dipstick.
- Add oil only if the oil level is below the add mark on the bottom of the cross-hatch pattern on the dipstick. **DO NOT OVERFILL**.

- Check the fuel level.
- If the unit is connected to a remote start or transfer switch, verify the remote switch is off and tagged.

NOTE: If the engine was run out of fuel or the fuel tank drained, it may be necessary to purge the fuel lines. Refer to the engine operator's manual supplied with the unit.

Basic Maintenance Schedule

Refer to the original equipment manufacturer's operating manual for a complete list of maintenance requirements. Failure to comply with the procedures as described in the engine operator's manual will nullify the warranty, decrease performance, and cause equipment damage or premature equipment failure. Maintenance records may be required to complete a warranty request.

Use the schedule in the following table as a guide for regular maintenance intervals. For additional or replacement copies of the engine operator's manual, contact a GMASD.

Basic Maintenance Schedule

Item	Daily	First 50 Hr	Every 750 Hr	Every 1,000 Hr	As Required
Check oil level	♦				
Check coolant level	♦				
Check fuel level	♦				
Check tire pressure	♦				
Inspect wheel bearings	♦				
Inspect all electrical connections	♦				
Inspect radiator fins for debris; clean as required	♦				
Inspect light tower winch for proper operation	♦				
Inspect fan belt for tightness	♦				
Inspect radiator hoses and clamp bands	♦				
Replace fan belt			♦		
Replace engine oil and oil filter		♦		♦*	
Inspect and adjust belt and belt tension		♦	♦		
Replace fuel filter element			♦		
Inspect battery condition			♦		
Replace air filter element			♦		
Lubricate leveling jacks					♦
Purge air from fuel system					♦
Drain residual water from fuel filter					♦

* *Generac Mobile recommends oil change intervals on the MLTS equipped with the Mitsubishi L2E Tier 4 engine be extended to 1,000 hours after initial break-in. The engine comes from the factory with a larger sump that holds 5.5 qts (5.2 L) of engine oil. After the initial 50 hour break-in and oil change, the sump, coupled with the larger oil filter, allows the engine to operate up to 1,000 hours between routine oil changes. Hot, humid, or dusty conditions can shorten engine oil service life, regardless of suggested oil change intervals. Always follow the recommendations of the OEM engine manual that was shipped with the unit for specific operating instructions. If further technical assistance is required, contact Generac Mobile Technical Service at 1-800-926-9768.*

Manual Winch: Use, Operation, and Maintenance

Prior to Use

- Inspect rope or cable and replace if damaged.
- Inspect mounting hardware for correct tightness and torque if necessary.
- Gears, ratchet pivot point, and shaft bushings must be kept lubricated with a thin film of oil or grease.

Operation

Raising the Lights:

1. The cable must be securely fastened to the winch drum.
2. Verify the cable and cable attachments are not damaged. Contact Generac Mobile to order a replacement cable if necessary.
3. Referring to the “Lift / Let Down” decal on the winch, turn handle according to the specified direction to lift. The ratchet MUST make a loud clicking sound while winding the cable.

Lowering the Lights:

Referring to the “Lift / Let Down” decal on the winch, turn handle according to the specified direction to lower. No clicking will be heard because the brake system is activated.

Maintenance

The following procedures should be performed at least annually:

1. The gears and bushings of the winch must be kept lubricated. Apply a thin film of grease to the gear teeth, and oil the bushings as needed.
2. The ratchet pawl pivot point must be kept lubricated with a thin oil.

NOTE: Do not get oil or grease on the brake mechanism.

Electric Winch (If Equipped): Use, Operation, and Maintenance

- Keep the winch free of dirt, oil, grease, water, and other substances.
- Check all mounting bolts and verify they are tightened to the recommended torque values. Replace any damaged fasteners.
- Periodically inspect all connections to verify they are tight and free of corrosion.
- Inspect the cable for visible damage every time the winch is operated. Examples of damage are: cuts, knots, crushed or frayed portions, and broken strands. Replace cable immediately if damaged. Failure to replace a damaged cable could result in breakage.
- Regularly inspect the brake for slippage or drift. This is detected visually when winch is under load. If winch drum continues to turn after controls are released, the brake may need to be replaced.
- Periodically clean and grease the brake assembly. This will ensure correct performance and extend the life of the winch. If winch seems to labor or get excessively hot during the lowering of loads, the brake will need to be serviced or replaced.
- Inspect motor brushes periodically and replace when necessary.

NOTE: Only the motor brushes and brake assembly require periodic replacement.

Winch Mechanical Brake

The mechanical brake generates heat when loads are lowered and the wire cable is powered out. Avoid overheating the mechanical brake. Overheating the mechanical brake may result in permanent damage to, or failure of, the brake. Replace any damaged brake components before resuming use of the winch.

Whine or chatter associated with a new mechanical brake is normal and typically disappears with use.

Overheating the mechanical brake may result in permanent damage to, or failure of, the brake. Replace any damaged brake components before resuming use of the winch.

Winch Preventative Maintenance Schedule

Maintenance Activity	After First Operation	Before Each Use	Semi-Annually
Inspect fasteners	♦		♦
Inspect electrical connections	♦		♦
Clean and grease brake assembly			♦
Inspect motor brushes			♦
Inspect winch and control	♦	♦	♦

Trailer Wheel Bearings

The trailer axles are equipped with a Zerk grease fitting to allow lubrication of the wheel bearings without the need to disassemble the axle hub. Use only a high quality grease made specifically for lubrication of wheel bearings, such as Valvoline W615 or equivalent.

See ***Figure 4-1***. Proceed as follows to lubricate the wheel bearings:

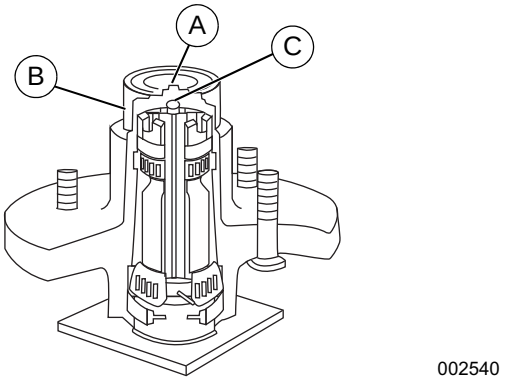

Figure 4-1. Wheel Bearing Cross Section

1. Remove the small rubber plug (A) from the metal end cap (B).
2. Attach a standard grease gun fitting to the Zerk grease fitting (C).
3. Pump grease into the Zerk fitting until fresh grease is visible around the nozzle of the grease gun.
4. Wipe any excess grease from the axle hub with a clean cloth and replace the rubber plug.

The minimum recommended lubrication is every 12 months or 12,000 miles (19,312 km). More frequent lubrication may be required under extremely dusty or damp operating conditions.

Every six months, or depending on usage, check for play in each bearing by jacking up the trailer, then trying to rock the wheel. If further assistance is required, contact Generac Mobile Technical Service at 1-800-926-9768.

Jack Maintenance

Before each use, inspect each jack foot for damage and remove any mud or debris. The jacks must be clean and in good operating condition to correctly support the unit.

Section 5: Troubleshooting

General Troubleshooting

⚠WARNING

Risk of burns. Allow engine to cool before draining oil or coolant. Failure to do so could result in death or serious injury.

(000139)

Some of the more common problems are listed in the table below. This information is intended to be a check or verification that simple causes can be located and fixed. It does not cover all types of problems. Refer to the OEM engine operator's manual for additional troubleshooting information. Procedures that require in-depth knowledge or skills should be referred to a GMASD.

General Troubleshooting Guide

Problem	Possible Cause	Solution
Low oil pressure shutdown	Low oil level	Verify oil level on dipstick. Add oil, if needed.
	Oil leaking from engine	Inspect the engine for leaks.
	Oil pressure switch failure	Refer to OEM engine operator's manual to identify corrective action.
High coolant temperature shutdown	Low coolant level	Add coolant if needed. Allow engine to cool, then check coolant level in radiator. Restart engine and check coolant temperature. Stop engine immediately if coolant temperature is 210 °F (99 °C) or more.
	Blockage in radiator	Inspect radiator shroud and ducting for blockage and remove any foreign matter.
	Leakage in coolant hoses, engine block, or water pump	Inspect for visible leaks. Verify tension of water pump serpentine drive belt. Remove load on generator and restart engine. Verify coolant temperature and shut engine down immediately if it starts to overheat. Refer to the OEM engine operator's manual for additional information on engine overheating.
	Faulty thermostat	Contact a GMASD to replace.
	Water pump failure	Contact a GMASD to replace.
	Incorrect mix/frozen radiator	Thaw the radiator with an external heat source and flush the coolant system with the correct coolant mixture.
Unit cranks but does not start	Low fuel level	Check fuel level in tank. Verify fuel pump operation.
	Restricted air filter	Inspect air filter for blockage. Refer to OEM engine operator's manual for additional information.
	PAS engaged	Verify PAS is off.

If problems persist, contact Generac Mobile at 1-800-926-9768 for assistance.

Troubleshooting the Lights

Only a qualified electrician should troubleshoot or repair electrical problems occurring in this equipment. Contact Generac Mobile Technical Service at 1-800-926-9768 for assistance if you have any questions, or if problems persist.

WARNING

Electrocution. Potentially lethal voltages are generated by this equipment. Render the equipment safe before attempting repairs or maintenance. Failure to do so could result in death or serious injury.

(000187)

Lights Troubleshooting Guide

Problem	Possible Cause	Solution
Mast lights off, checking outside control box	Light fixture is too hot	Allow light to cool 10–15 minutes before restarting.
	Loose lighting connections	Inspect the connections inside the mast junction box and each mast light housing/socket.
	Damaged or loose electrical cord	Inspect the mast electrical cord for damage and check the cord connections inside the control box.
	Faulty fuel filter	With engine running and lights off, measure voltage and frequency at the GFCI receptacle. Voltage should indicate 120VAC ± 5%, and frequency should indicate 60.7 Hz ± 5%. If frequency and voltage are both low (<114VAC, <58 Hz), replace the fuel filter.
	Faulty generator capacitor	Measure the capacitance of the generator capacitor. If measurement is outside rating (as indicated on the capacitor), replace the capacitor.
Mast lights off, checking inside control box	Loose lighting connections	Inspect the connections inside the control box.
	Generator output incorrect	Check the incoming voltage to the ballast driver by checking the available voltage on the GFCI receptacle. Incoming voltage should be 120V ± 5V. If voltage is incorrect, the generator may require service.

Troubleshooting Controller Fault Indicators

See ***Figure 5-1***. When a fault occurs, the engine shuts off and an LED indicator illuminates on the controller.

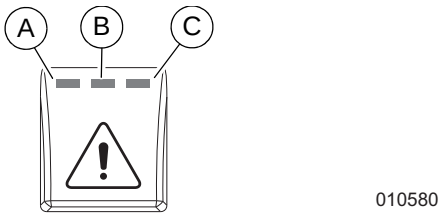

Figure 5-1. Fault Indicator Button

Illuminated LED	Indicates Fault	Resolution
A	Low engine oil pressure or high engine coolant temperature	See ***General Troubleshooting*** —low oil pressure & high engine coolant temperature.
A+C	Engine overspeed or engine underspeed	1. Check connection on W terminal of DC Charge Alternator—WH/VI to pin-9 on the Power Zone controller. 2. Inspect function of DC charge alternator. 3. Inspect tension of DC charge alternator drive belt. 4. Contact Generac Mobile.
C	Fail to crank (AUTO mode only)	See ***General Troubleshooting*** —fail to crank
B+C	Loss of speed	1. Check connection on W terminal of DC Charge Alternator—WH/VI to pin-9 on the Power Zone controller. 2. Inspect function of DC charge alternator. 3. Inspect tension of DC charge alternator drive belt. 4. Contact Generac Mobile.

IMPORTANT NOTE: To clear controller faults, press and hold the Fault Indicator button (***Figure 5-1***) for three seconds.

This page intentionally left blank.

Mast Junction Box Wiring and Light Connections

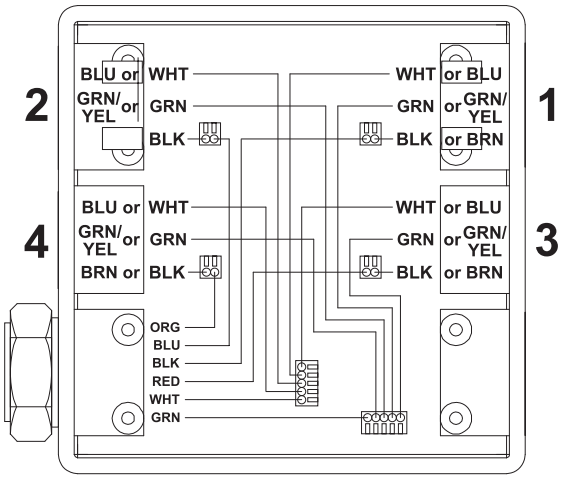

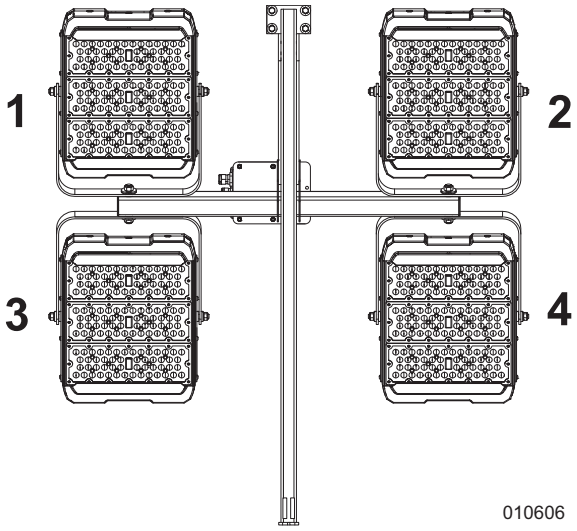

AC Wiring (1 of 3)

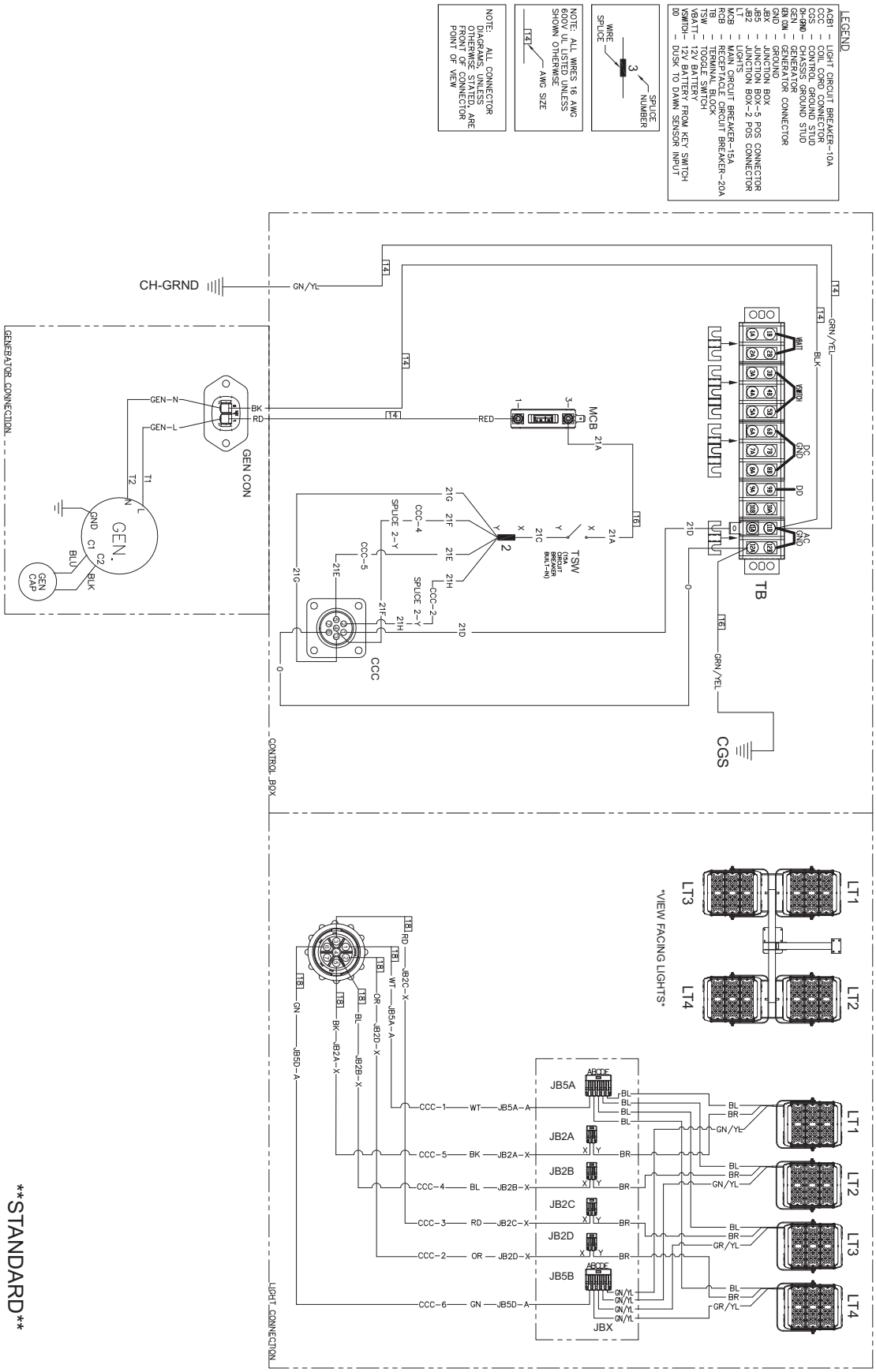

A0000116053SH1_B_11.05.19

AC Wiring (2 of 3)

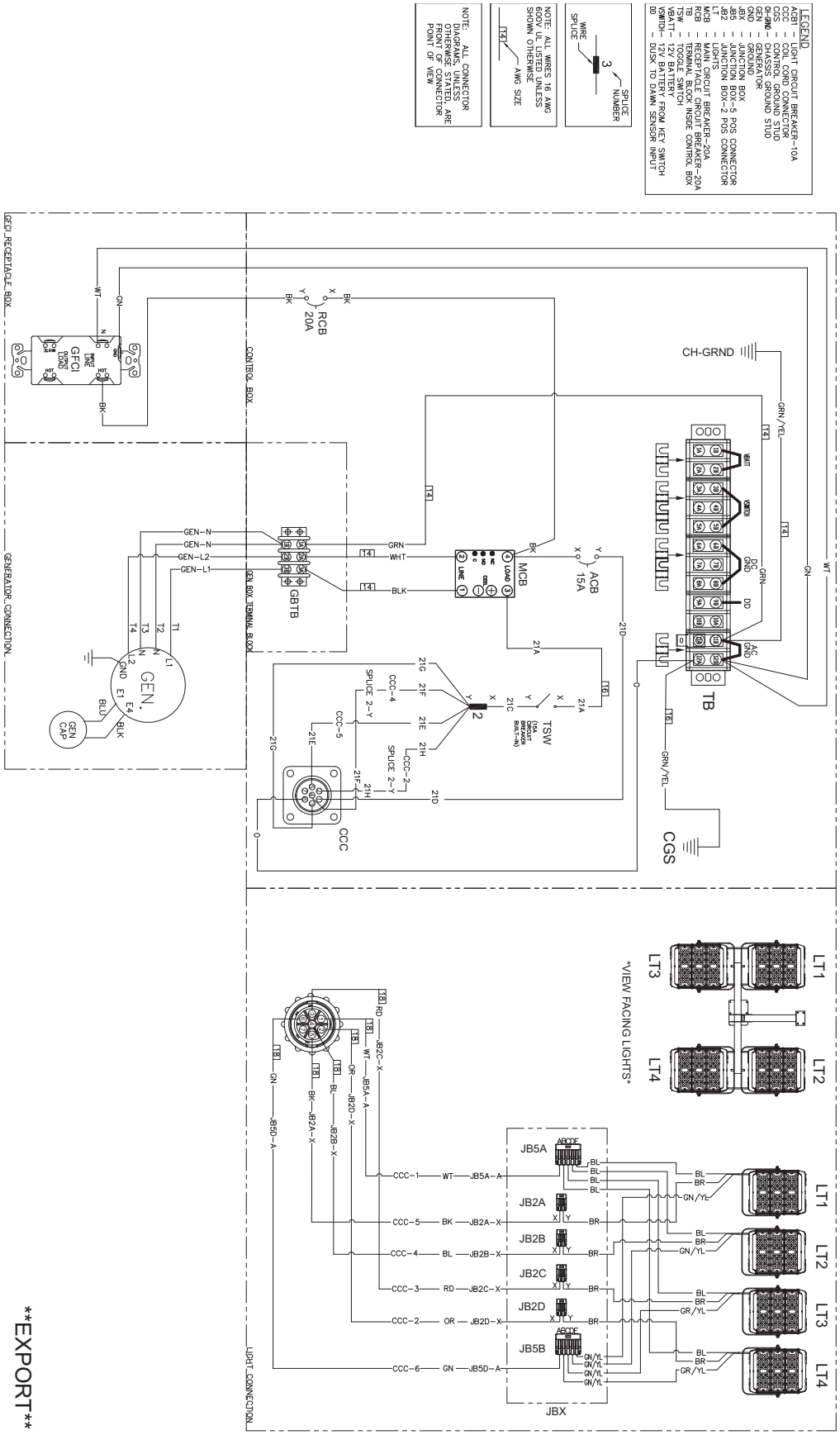

A0000116053SH2_B_11.05.19

AC Wiring (3 of 3)

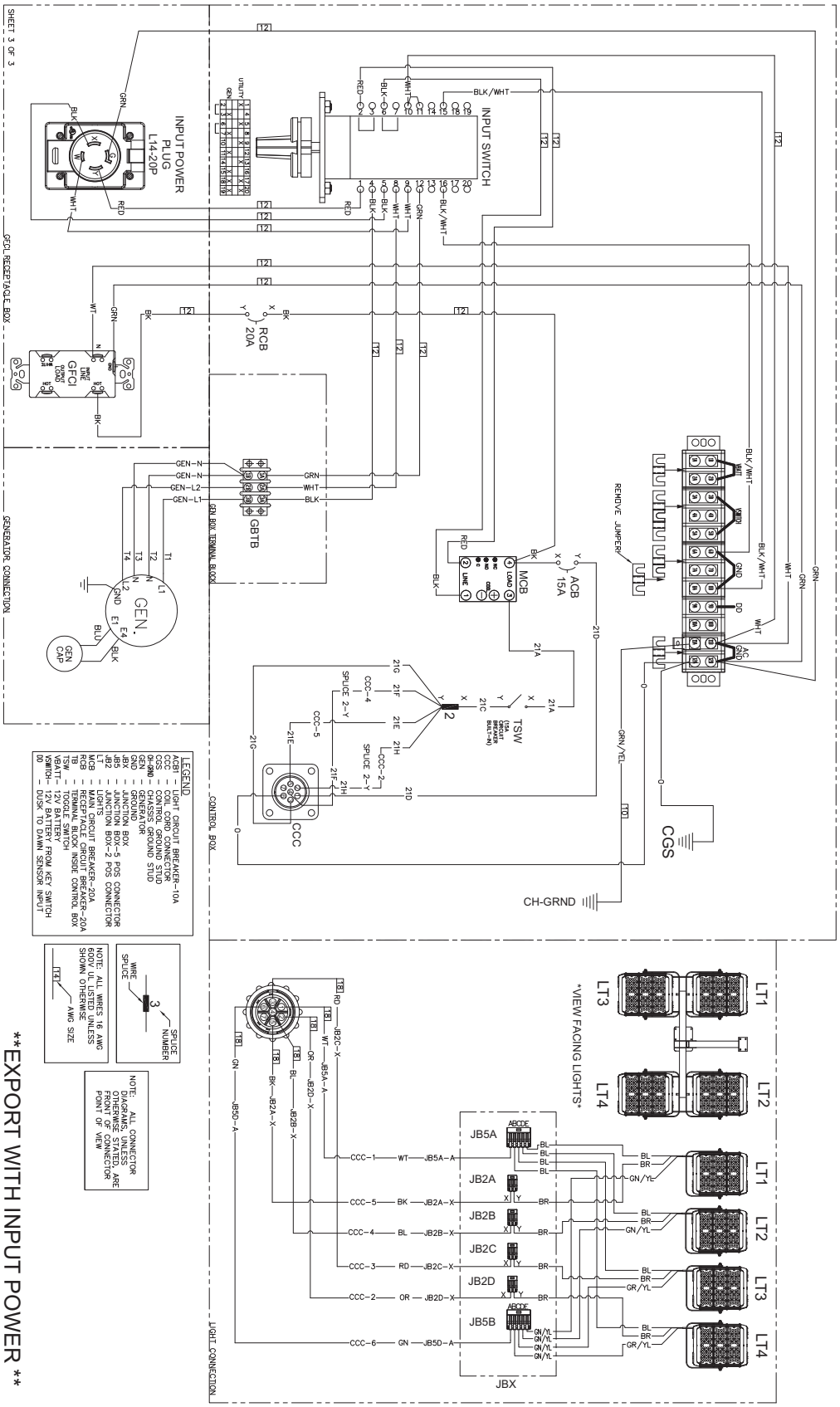

A0000116053SH3_B_11.05.19

DC Wiring

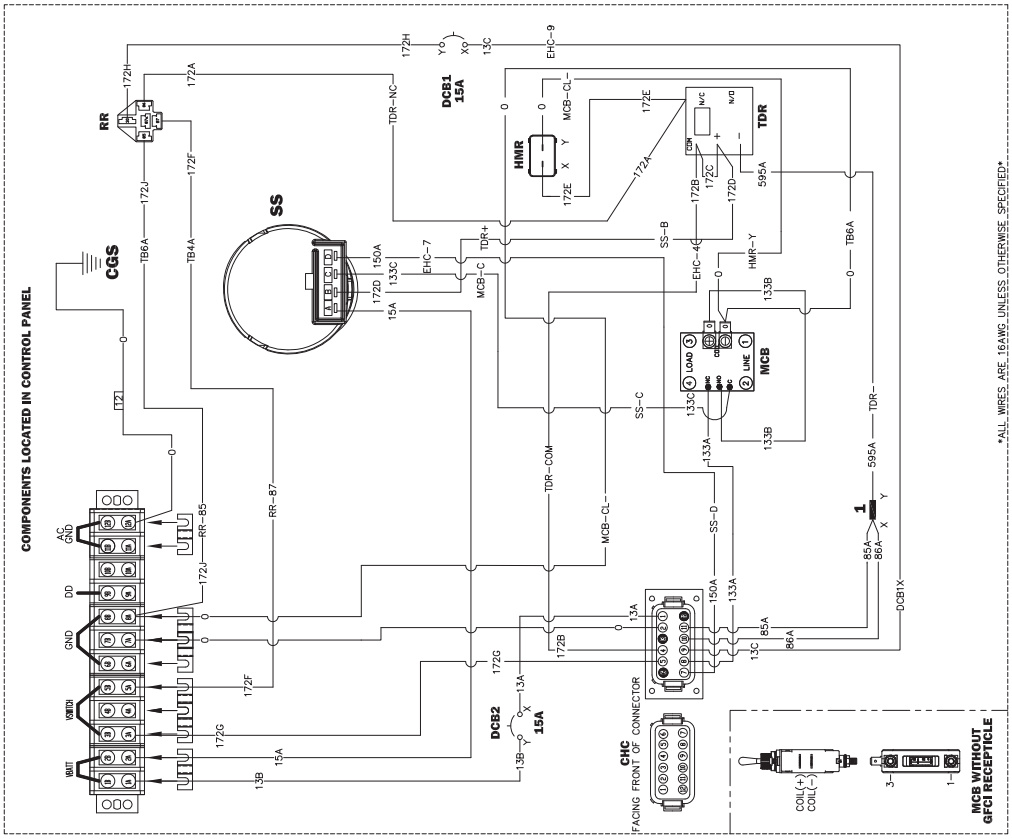

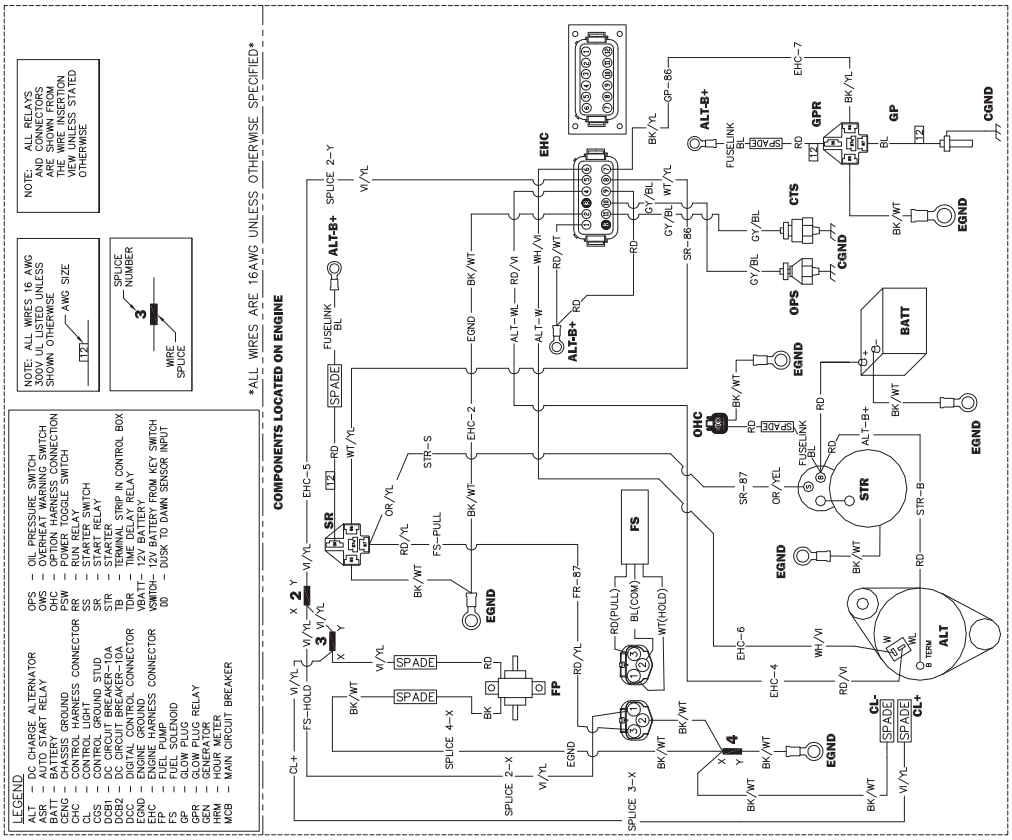

A0000116053SH1_B_11.05.19

AC Wiring—Power Zone (If Equipped) (1 of 3)

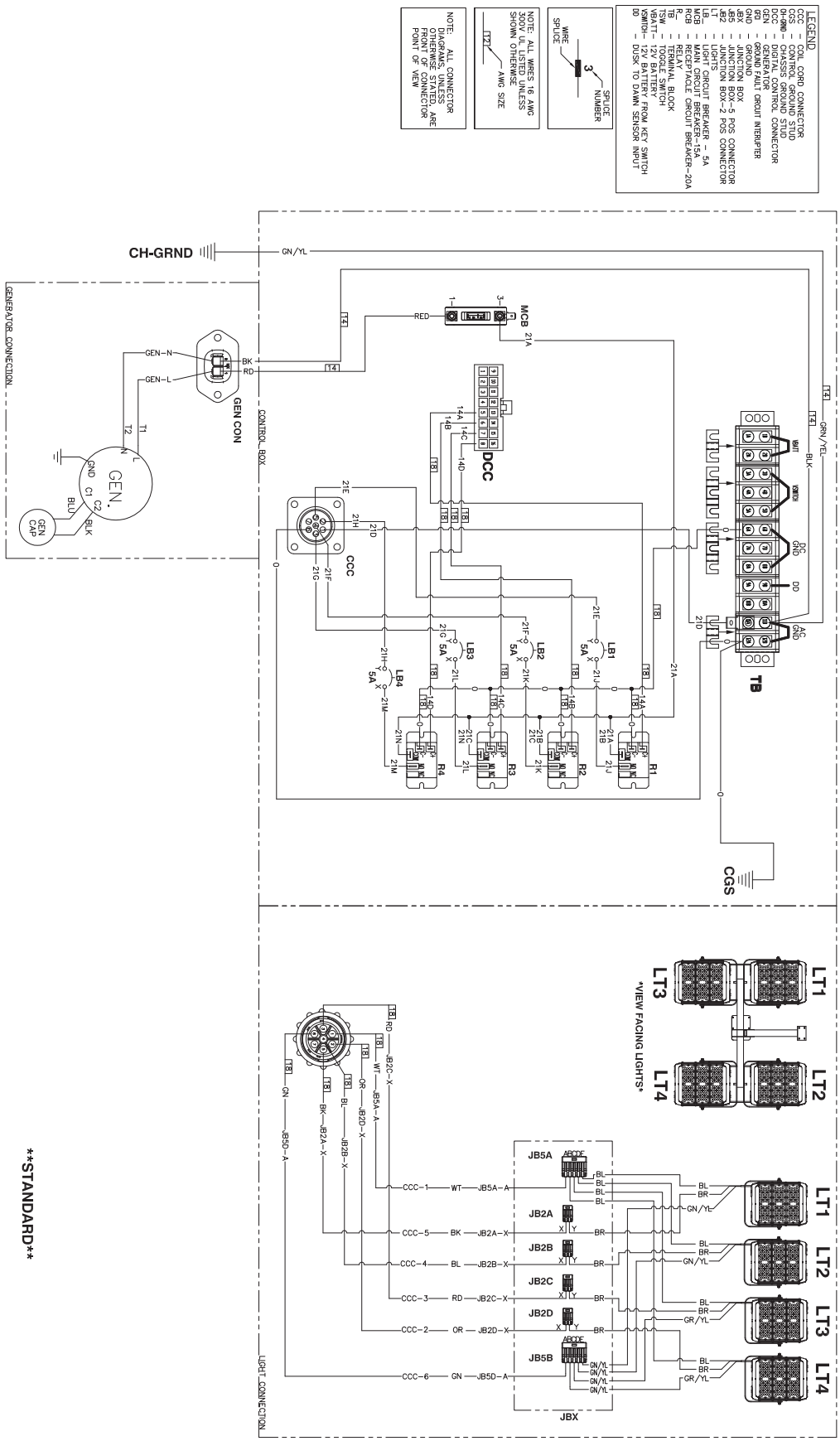

A0000221210SH1_B_11.05.19

AC Wiring—Power Zone (If Equipped) (2 of 3)

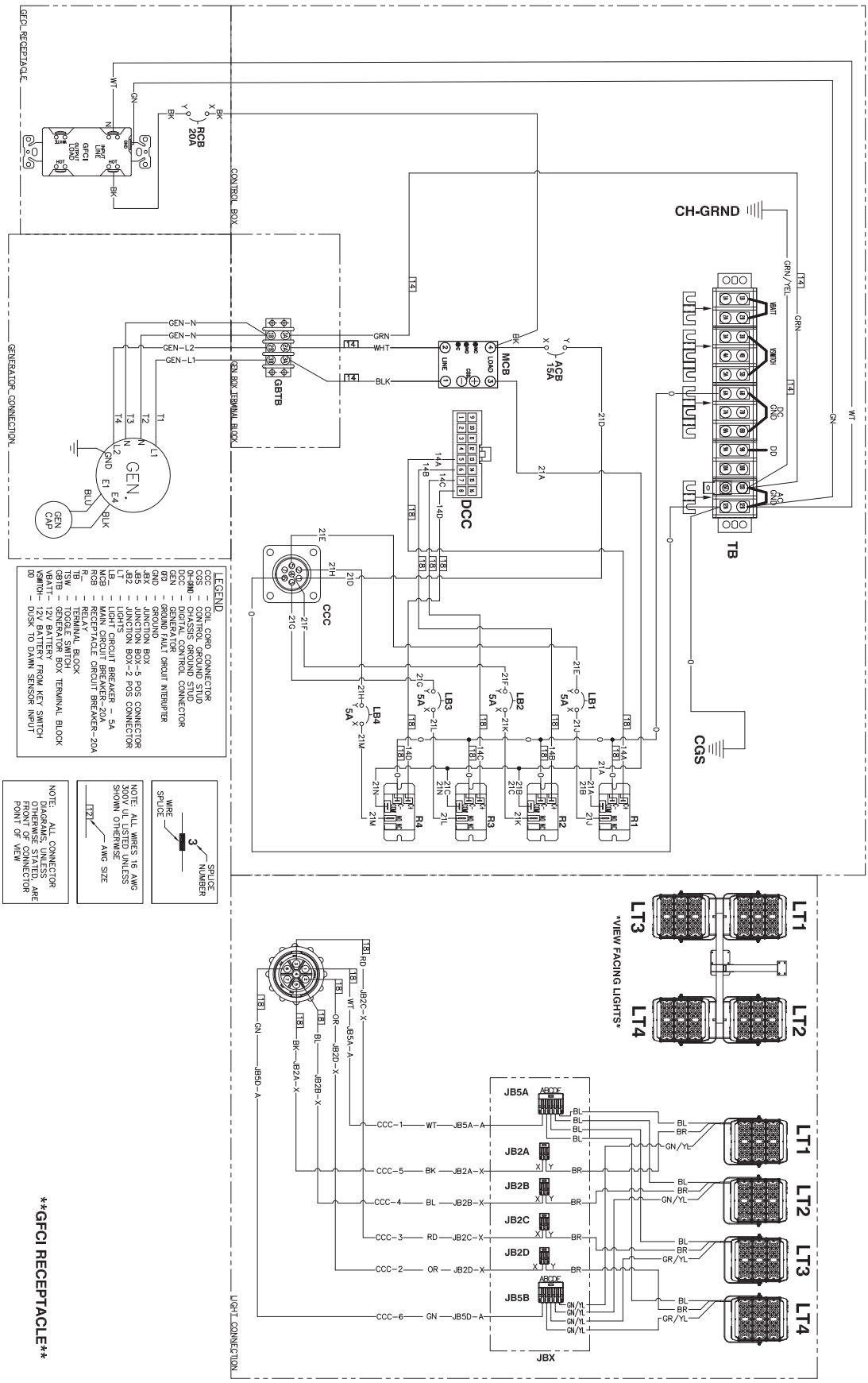

A0000221210SH2_B_11.05.19

AC Wiring—Power Zone (If Equipped) (3 of 3)

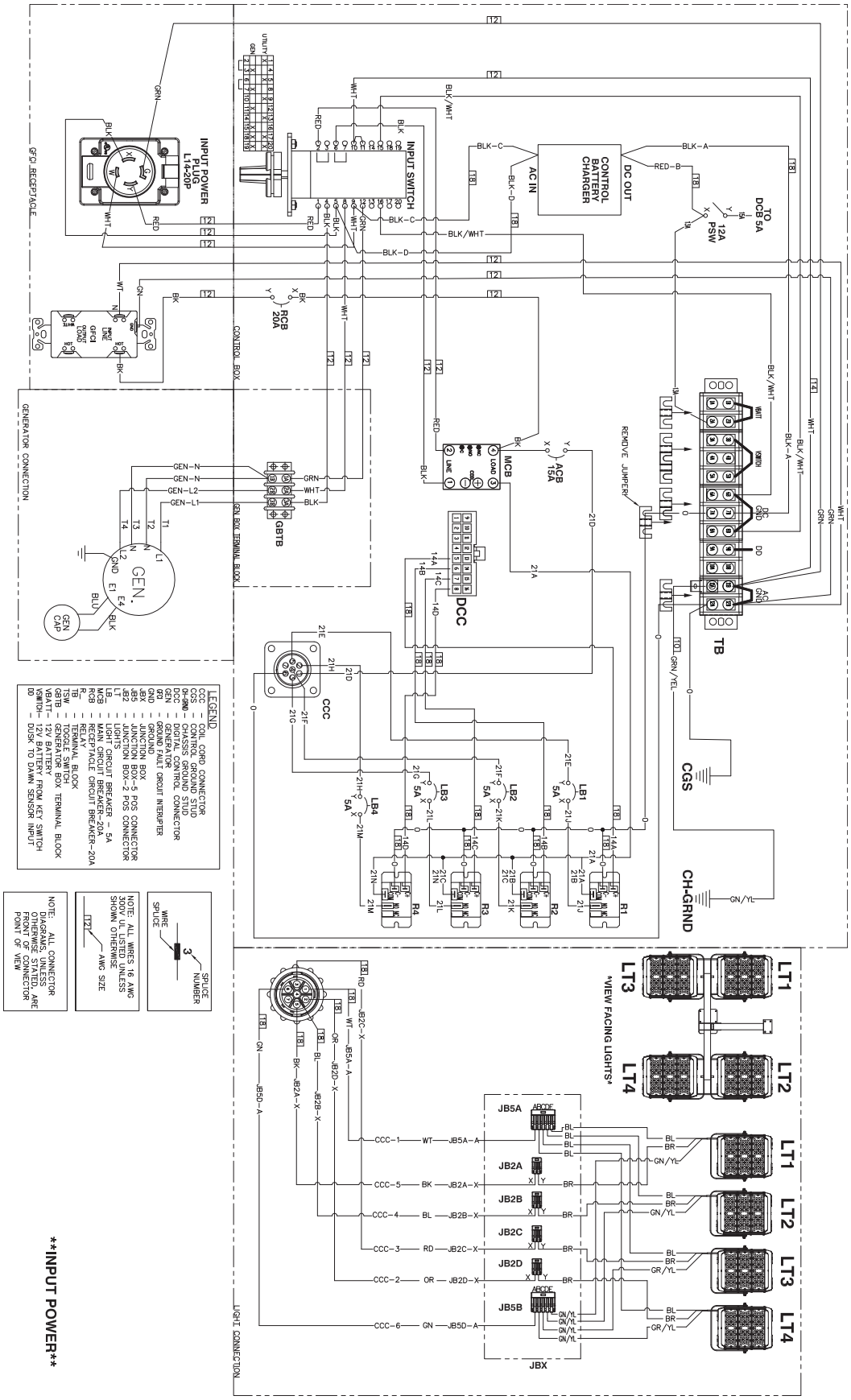

A0000221210SH3_B_11.05.19

DC Wiring—Power Zone (If Equipped)

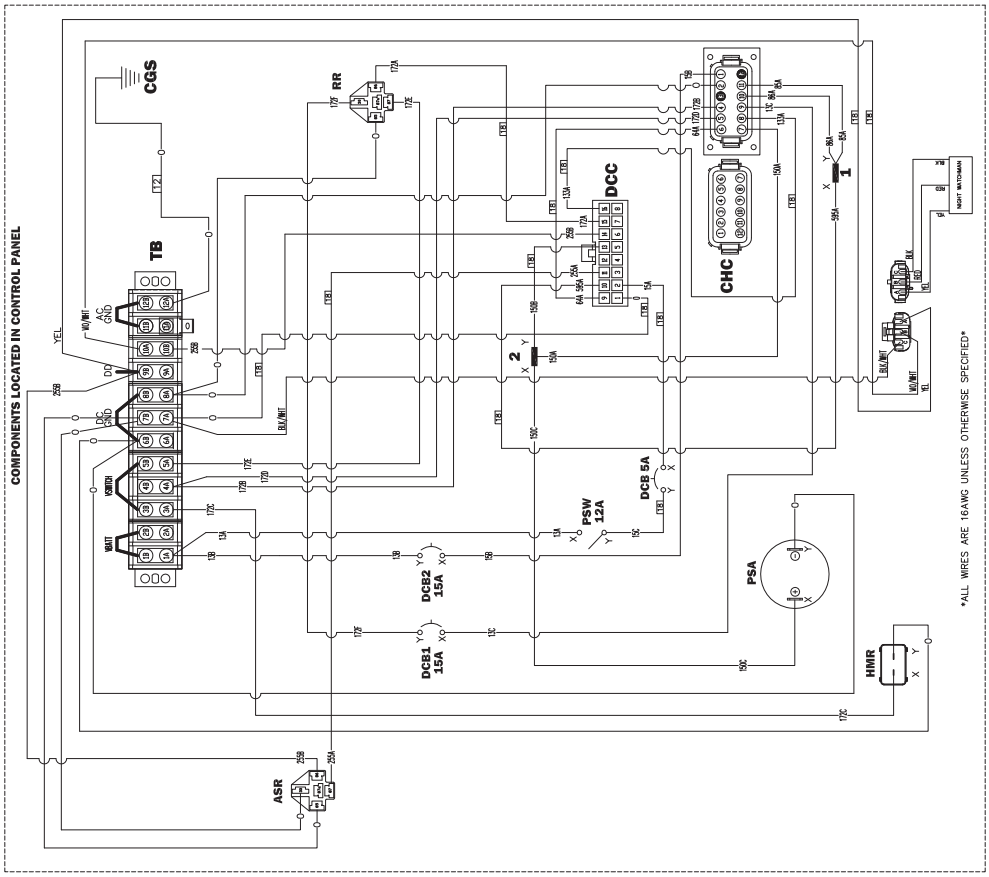

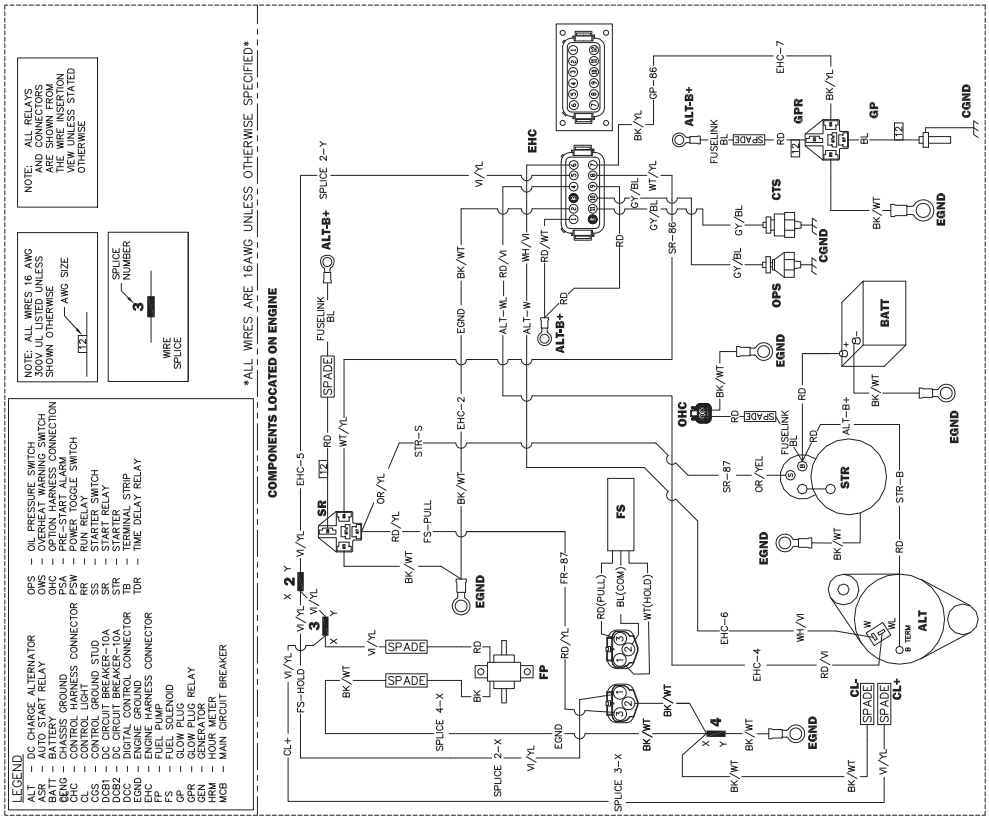

A0000221208SH1_B_11.05.19

Trailer Lights

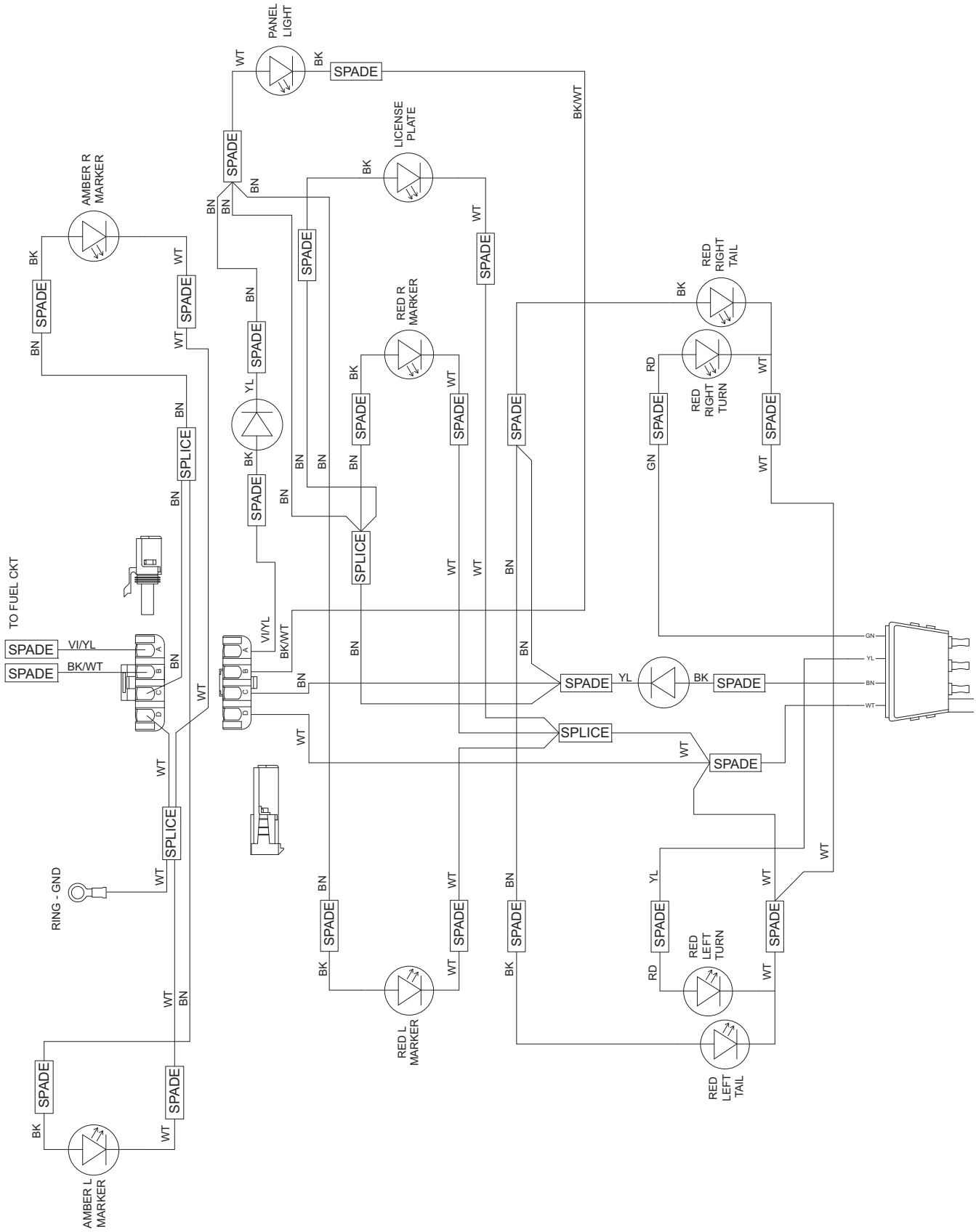

90520_D_08.27.14

Part No. A0000389937 Rev A 01/24/2020

©2020 Generac Mobile Products, LLC
All rights reserved.
Specifications are subject to change without notice.
No reproduction allowed in any form without prior written consent from Generac Mobile Products, LLC.

Generac Mobile Products, LLC
215 Power Drive, Berlin, WI 54923
GeneracMobileProducts.com | 800-926-9768 | 920-361-4442