Installation, Operation, and Maintenance

Foundation™ Packaged Rooftop Units

Cooling Only and Electric Heat
15 to 25 Tons, 60 Hz

Model Number: EDK180-300

⚠ SAFETY WARNING

Only qualified personnel should install and service the equipment. The installation, starting up, and servicing of heating, ventilating, and air-conditioning equipment can be hazardous and requires specific knowledge and training. Improperly installed, adjusted or altered equipment by an unqualified person could result in death or serious injury. When working on the equipment, observe all precautions in the literature and on the tags, stickers, and labels that are attached to the equipment.

October 2025 **RT-SVX094C-EN**

Introduction

Read this manual thoroughly before operating or servicing this unit.

Warnings, Cautions, and Notices

Safety advisories appear throughout this manual as required. Your personal safety and the proper operation of this machine depend upon the strict observance of these precautions.

The three types of advisories are defined as follows:

⚠ WARNING	Indicates a potentially hazardous situation which, if not avoided, could result in death or serious injury.
⚠ CAUTION	Indicates a potentially hazardous situation which, if not avoided, could result in minor or moderate injury. It could also be used to alert against unsafe practices.
NOTICE	Indicates a situation that could result in equipment or property-damage only accidents.

Important Environmental Concerns

Scientific research has shown that certain man-made chemicals can affect the earth's naturally occurring stratospheric ozone layer when released to the atmosphere. In particular, several of the identified chemicals that may affect the ozone layer are refrigerants that contain Chlorine, Fluorine and Carbon (CFCs) and those containing Hydrogen, Chlorine, Fluorine and Carbon (HCFCs). Not all refrigerants containing these compounds have the same potential impact to the environment. Trane advocates the responsible handling of all refrigerants.

Important Responsible Refrigerant Practices

Trane believes that responsible refrigerant practices are important to the environment, our customers, and the air conditioning industry. All technicians who handle refrigerants must be certified according to local rules. For the USA, the Federal Clean Air Act (Section 608) sets forth the requirements for handling, reclaiming, recovering and recycling of certain refrigerants and the equipment that is used in these service procedures. In addition, some states or municipalities may have additional requirements that must also be adhered to for responsible management of refrigerants. Know the applicable laws and follow them.

⚠ WARNING

Proper Field Wiring and Grounding Required!

Failure to follow code could result in death or serious injury.

All field wiring MUST be performed by qualified personnel. Improperly installed and grounded field wiring poses FIRE and ELECTROCUTION hazards. To avoid these hazards, you MUST follow requirements for field wiring installation and grounding as described in NEC and your local/state/national electrical codes.

⚠ WARNING

Personal Protective Equipment (PPE) Required!

Failure to wear proper PPE for the job being undertaken could result in death or serious injury.

Technicians, in order to protect themselves from potential electrical, mechanical, and chemical hazards, MUST follow precautions in this manual and on the tags, stickers, and labels, as well as the instructions below:

- **Before installing/servicing this unit, technicians MUST put on all PPE required for the work being undertaken (Examples; cut resistant gloves/ sleeves, butyl gloves, safety glasses, hard hat/ bump cap, fall protection, electrical PPE and arc flash clothing). ALWAYS refer to appropriate Safety Data Sheets (SDS) and OSHA guidelines for proper PPE.**
- **When working with or around hazardous chemicals, ALWAYS refer to the appropriate SDS and OSHA/GHS (Global Harmonized System of Classification and Labelling of Chemicals) guidelines for information on allowable personal exposure levels, proper respiratory protection and handling instructions.**
- **If there is a risk of energized electrical contact, arc, or flash, technicians MUST put on all PPE in accordance with OSHA, NFPA 70E, or other country-specific requirements for arc flash protection, PRIOR to servicing the unit. NEVER PERFORM ANY SWITCHING, DISCONNECTING, OR VOLTAGE TESTING WITHOUT PROPER ELECTRICAL PPE AND ARC FLASH CLOTHING. ENSURE ELECTRICAL METERS AND EQUIPMENT ARE PROPERLY RATED FOR INTENDED VOLTAGE.**

⚠ WARNING

Follow EHS Policies!

Failure to follow instructions below could result in death or serious injury.

- **All Trane personnel must follow the company's Environmental, Health and Safety (EHS) policies when performing work such as hot work, electrical, fall protection, lockout/tagout, refrigerant handling, etc. Where local regulations are more stringent than these policies, those regulations supersede these policies.**
- **Non-Trane personnel should always follow local regulations.**

⚠ WARNING

R-454B Flammable A2L Refrigerant!

Failure to use proper equipment or components as described below could result in equipment failure, and possibly fire, which could result in death, serious injury, or equipment damage.

The equipment described in this manual uses R-454B refrigerant which is flammable (A2L). Use ONLY R-454B rated service equipment and components. For specific handling concerns with R-454B, contact your local representative.

⚠ WARNING

Cancer and Reproductive Harm!

This product can expose you to chemicals including lead and bisphenol A (BPA), which are known to the State of California to cause cancer and birth defects or other reproductive harm. For more information go to www.P65Warnings.ca.gov.

⚠ WARNING

Electrical Shock Hazard!

Failure to follow instructions below could result in death or serious injury.

Properly connect the system's oversized protective earthing (grounding) terminal(s).

NOTICE

Water Damage!

Failure to follow instructions below could result in equipment and property damage.

Non-factory penetrations through the base of this unit are not allowed. Any penetration in the base of the unit may affect the water tight integrity of the unit and lead to water leaks into the conditioned space.

Overview of Manual

One copy of this document ships inside the control panel of each unit and is customer property. It must be retained by the unit's maintenance personnel.

Important: *Do not release refrigerant to the atmosphere! If adding or removing refrigerant is required, the service technician must comply with all federal, state, and local laws.*

This booklet describes the proper installation, start-up, operation, and maintenance procedures for air cooled systems.

By carefully reviewing the information within this manual and following the instructions, the risk of improper operation and/or component damage will be minimized.

It is important that periodic maintenance be performed to help assure trouble free operation. A maintenance schedule is provided at the end of this manual. Should equipment failure occur, contact a qualified service organization with qualified, experienced HVAC technicians to properly diagnose and repair this equipment.

Copyright

This document and the information in it are the property of Trane, and may not be used or reproduced in whole or in part without written permission. Trane reserves the right to revise this publication at any time, and to make changes to its content without obligation to notify any person of such revision or change.

Trademarks

All trademarks referenced in this document are the trademarks of their respective owners.

Factory Training

Factory training is available through Trane University™ to help you learn more about the operation and maintenance of your equipment. To learn about available training opportunities, contact Trane University™.

Online: www.trane.com/traneuniversity

Email: traneuniversity@trane.com

Product Safety Information

This appliance is not intended for use by persons (including children) with reduced physical, sensory or mental capabilities, or lack of experience and knowledge, unless they have been given supervision or instruction concerning use of the appliance by a person responsible for their safety. Children should be supervised to ensure that they do not play with the appliance.

Maximum altitude of use 3000 meters.

This appliance incorporates an earth connection for functional purposes only.

Revision History

Updated Warranty chapter.

Table of Contents

Model Number Description 7

General Information 8

Unit Inspection 8
Exterior Inspection 8
Inspection for Concealed Damage. 8

Unit Storage 8

Unit Description 8

Unit Nameplate. 9

Compressor Nameplate 9

System Input Devices and Functions 9
Drain Pan Condensate Overflow Switch 9
Phase Monitor 9
Discharge Line Temp Switch (DLTS) 9
Power Exhaust Control (Optional) 9
Evaporator Frost Control 9

Sensors 9
Zone Sensors 9
Thermostat (TCONT402AN32DA). 10
CO_2Sensor — Symbio™ 700 with Economizer Demand Control Ventilation (DCV) 10

Dimensional Data. 11

Weights 16

Rigging. 16

A2L Information and Installation Requirements 18

Installation/Code Compliance Requirements 18

A2L Work Procedures 18
Servicing 18
Leak Detection 19
Refrigerant Removal and Evacuation 19
Refrigerant Charging 20
Decommissioning 20

A2L Application Considerations. 20
Ignition Sources in Ductwork. 21
Ignition Sources in Unit 21
Minimum Room Area Limits (Refrigerant charge greater than 3.91 lb per circuit) 21
Leak Detection System (Refrigerant charge greater than 3.91 lb per circuit) 22

Installation 23

Unit Foundation 23
Horizontal Units. 23
Ductwork 23

General Unit Requirements 23
Factory Installed Economizer 24
Main Electrical Power Requirements 24
Electric Heat Requirements 24
Condensate Drain Configuration 24
Filter Installation 25
Field Installed MERV13 Filters 25
Field-Installed Power Wiring 25

Main Unit Power. 25
Standard Wiring 25
Optional TBUE Wiring (Through-the-Base Electrical Option) 26
Control Power Transformer. 26
Controls using DC Analog Input/Outputs (Standard Low Voltage Multi conductor Wire). 26
Space Temperature Averaging. 27
Voltage Imbalance 29
Electrical Phasing (Three Phase Motors) 29
Compressor Crankcase Heaters 29
Checklist. 30

Factory-Mounted Unit Options. 30
Unit Disconnect (FIYUDC) 30

Pre Start 32

Verifying Proper Air Flow (Units with Belt Drive Indoor Fan) 32

Symbio Service and Installation Mobile App 32

Symbio Controls. 32

Start-Up. 34

Symbio 700 Controls – Sequence of Operation. 34

Compressor Start-Up 34

Heating Start-Up 34

Final System Setup 34

Maintenance 35

Fan Belt Adjustment-Belt Drive Units 35

Monthly Maintenance 36
Filters 36
Condensate Overflow Switch 36
Cooling Season. 36
Heating Season. 37
Coil Cleaning 37

Troubleshooting 40
Symbio Controls 40
Wiring Diagrams 41
Warranty 42
For Commercial Unitary Equipment Rated 25 Tons and Under and Related Accessories. 42
Basic Warranty 42
Exclusions and Limitations 42

Model Number Description

Digit 1 — Unit Function

E = DX Cooling

Digit 2 — Cooling Efficiency

D = Standard Efficiency

Digit 3 — Refrigerant

K = R-454B

Digit 4, 5, 6 — Nominal Gross Cooling Capacity (MBh)

180 = 15 Tons
210 = 17.5 Tons
240 = 20 Tons
300 = 25 Tons

Digit 7 — Major Design Sequence

A = Rev A

Digit 8 — Voltage Selection

3 = 208-230/60/3
4 = 460/60/3
W = 575/60/3

Digit 9 — Unit Controls

S = Symbio™ 700

Digit 10 — Heating Capacity

0 = No Heat
G = 18 kW Electric Heat
N = 36 kW Electric Heat
P = 54 kW Electric Heat
R = 72 kW Electric Heat

Digit 11— Minor Design Sequence

A = Rev A

Digit 12,13 — Service Sequence

****** = Factory Assigned

Digit 14 — Fresh Air Selection[3], [4]

0 = No Fresh Air

A = Manual Outside Air Damper 0-25%

B = Motorized Outside Air Damper 0-50%

C = Economizer, Dry Bulb 0-100% without Barometric Relief

D = Economizer, Dry Bulb 0-100% with Barometric Relief[1]

E = Economizer, Reference Enthalpy 0-100% without Barometric Relief

F = Economizer, Reference Enthalpy 0-100% with Barometric Relief[1]

G = Economizer, Comparative Enthalpy 0-100% without Barometric Relief

H = Economizer, Comparative Enthalpy 0-100% with Barometric Relief[1]

J = Downflow Low Leak Economizer, Dry Bulb w/o Barometric Relief

L = Downflow Low Leak Economizer, Reference Enthalpy w/o Barometric Relief

N = Downflow Low Leak Economizer, Comparative Enthalpy w/o Barometric Relief

S = Downflow Low Leak Economizer, Differential Dry Bulb w/o Barometric Relief

Digit 15 — Supply Fan/Drive Type/Motor

7 = Multi-Speed Standard Motor
9 = Multi-Speed Oversized Motor
A = Single Zone Variable Air Volume with Standard Motor
B = Single Zone Variable Air Volume with Oversized/High Static Motor

Digit 16 — Access/Filters

0 = Standard Fork Access/Standard Filters
F = Third Side Condenser Fork Access (15-25 Ton)/Standard Filters
D = Standard Fork Access/2 inch MERV 13 Filters
G = Third Side Condenser Fork Access (15-25 Ton)/2 inch MERV 13 Filters

Digit 17 — Condenser Coil Protection

0 = Standard Coil
4 = CompleteCoat™ Condenser Coil

Digit 18 — Through-the-Base Provisions

0 = No Through-the-Base Provisions
A = Through-the-Base Electric

Digit 19 — Disconnect Switch

0 = No Disconnect
1 = Unit Mounted Non-Fused Disconnect Switch[2]

Digit 20 — 24

Not Used

Digit 25 — System Monitoring Controls

0 = No Monitoring Controls
A = Condensate Drain Pan Overflow Switch

Digit 26

Not Used

Model Number Notes

Notes:

1. Some field set up required.
2. Must be ordered with Through the- Base Electrical option.
3. All Factory Installed Options are Built-to-Order. Check order services for estimated production cycle.
4. Factory installed economizers only available in downflow configuration.

General Information

⚠ WARNING

Fiberglass Wool!

Exposure to glass wool fibers without all necessary PPE equipment could result in cancer, respiratory, skin or eye irritation, which could result in death or serious injury. Disturbing the insulation in this product during installation, maintenance or repair will expose you to airborne particles of glass wool fibers and ceramic fibers known to the state of California to cause cancer through inhalation.
You MUST wear all necessary Personal Protective Equipment (PPE) including gloves, eye protection, a NIOSH approved dust/mist respirator, long sleeves and pants when working with products containing fiberglass wool.

Precautionary Measures:

- **Avoid breathing fiberglass dust.**
- **Use a NIOSH approved dust/mist respirator.**
- **Avoid contact with the skin or eyes. Wear long-sleeved, loose-fitting clothing, gloves, and eye protection.**
- **Wash clothes separately from other clothing; rinse washer thoroughly.**
- **Operations such as sawing, blowing, tear-out, and spraying may generate fiber concentrations requiring additional respiratory protection. Use the appropriate NIOSH approved respirator.**

First Aid Measures:

- **Eye Contact - Flush eyes with water to remove dust. If symptoms persist, seek medical attention.**
- **Skin Contact - Wash affected areas gently with soap and warm water after handling.**

Unit Inspection

To protect against loss due to damage incurred in transit, perform inspection immediately upon receipt of the unit. Check carefully for shipping damage. If any damage is found, report it immediately, and file a claim against the transportation company.

Exterior Inspection

If the job site inspection reveals damage or material shortages, file a claim with the carrier immediately. Specify the type and extent of the damage on the bill of lading before signing. Notify the appropriate sales representative.

Important: *Do not proceed with installation of a damaged unit without sales representative approval.*

- Inspect the complete exterior for signs of shipping damages to unit or packing material.
- Verify that the nameplate data matches the sales order and bill of lading.
- Verify that the unit is properly equipped and there are no material shortages.
- Verify the power supply complies with the unit nameplate specifications.

Inspection for Concealed Damage

Inspect the components for concealed damage as soon as possible after delivery and before it is stored.

If concealed damage is discovered:

- Notify the carrier's terminal of the damage immediately by phone and by mail.
- Concealed damage must be reported within 15 days.
- Request an immediate, joint inspection of the damage with the carrier and consignee.
- Stop unpacking the unit.
- Do not remove damaged material from receiving location.
- Take photos of the damage, if possible.
- The owner must provide reasonable evidence that the damage did not occur after delivery.

Unit Storage

Take precautions to prevent condensate from forming inside the unit's electrical compartments and motors if:

- The unit is stored before it is installed; or,
- The unit is set on the roof curb, and temporary heat is provided in the building. Isolate all side panel service entrances and base pan openings (e.g., conduit holes, S/A and R/ A openings, and flue openings) from the ambient air until the unit is ready for start-up.

Note: *Do not use the unit heater for temporary heat without first completing the start-up.*

The manufacturer will not assume any responsibility for equipment damage resulting from condensate accumulation on the unit electrical and/or mechanical components.

Unit Description

All units come with standard Symbio™ 700 control system with advanced diagnostics.

Before shipment, each unit is leak tested, dehydrated, charged with refrigerant and compressor oil, and run tested for proper control operation. Direct-drive, vertical discharge condenser fans are provided with built-in thermal overload protection.

Unit Nameplate

A Mylar unit nameplate is located on the unit corner support next to the filter access panel. It includes the unit model number, serial number, electrical characteristics, refrigerant charge, and other pertinent unit data.

Compressor Nameplate

The nameplate for the compressors are located on the side of the compressor.

System Input Devices and Functions

The Symbio™ 700 controller requires a zone sensor or thermostat input to operate the unit in a CVZT or VVZT configuration.

Note: *Use of a conventional thermostat will reduce unit functionality.*

The number of available modes depends on the type of zone sensor or thermostat selected. Descriptions of the basic input devices used with the Symbio 700 network are provided to acquaint the operator with the various modules. Refer to the unit schematic for specific module connections. The following controls are available from the factory for field installation.

Drain Pan Condensate Overflow Switch

A condensate overflow condition is detected by a condensate overflow float switch.

When the condensate level reaches the trip point, the diagnostic condition is detected.

When the condensate overflow input closes for 6 seconds, the following actions are taken by the Symbio™ 700 controls:

- An auto-reset diagnostic is generated. All compressor or heating operations are disabled immediately. Condenser fans and compressors are de-energized and supply fan operation shutsdown.
- Once the overflow condition is cleared and the input is open for 6 seconds, all diagnostic conditions are cleared. The unit returns to normal operation. Auto-reset clearing occurs twice each time the unit is powered up. On the third occurrence, the unit initiates a lock-out and requires manual reset. If an auto- reset overflow occurs once, but does not occur again for 72 hours, the trip counter will reset allowing more auto-resets to occur.

Phase Monitor

This sensor monitors voltage between three conductors of the three-phase power supply. Two LED lights are provided:

- The green light indicates that a balanced three-phase supply circuit is properly connected.
- The red light indicates that unit operation has been prevented. There are two conditions that will prevent unit operation:
  - The power supply circuit is not balanced with the proper phase sequence of L1, L2, L3 for the 3 conductors of a three-phase circuit.
  - The line to line voltage is not between 180 volts and 633 volts.

Discharge Line Temp Switch (DLTS)

The DLTS is looped in series with HPC and LPC. It prevents the compressor from overheating (over 300°F dome temp) in case of indoor fan failure (cooling) or outdoor fan failure (heating).

Power Exhaust Control (Optional)

The power exhaust fan starts whenever the position of the outdoor air damper meets or exceeds the relief enable position setpoint when the indoor fan is on.

Evaporator Frost Control

Frostat™ is standard on all units.

Sensors

Zone Sensors

Manual Changeover (BAYSENS106*)

This sensor features three system switch settings (Heat, Cool, and Off) and two fan settings (On and Auto). It is a manual changeover control with single setpoint.

Manual/Automatic Changeover (BAYSENS108*)

This sensor features four system switch settings (Heat, Cool, Auto, and Off) and two fan settings (On and Auto). It is a manual or auto changeover control with dual setpoint capability. It can be used with a remote zone temperature sensor BAYSENS077*.

Integrated Comfort System (BAYSENS073*)

This sensor features remote zone sensing and timed override with override cancellation. It is used with a Trane Integrated Comfort™ building management system.

Integrated Comfort System (BAYSENS074*)

This sensor features single setpoint capability and timed override with override cancellation. It is used with a Trane Integrated Comfort™ building management system.

Remote Zone Sensor (BAYSENS016*)

This bullet type temperature sensor can be used for outside air (ambient) sensing, return air temperature sensing, supply air temperature sensing, and remote temperature sensing (uncovered). Wiring procedures vary according to the particular application and equipment involved. Refer to the unit’s wiring diagrams for proper connections.

Remote Zone Sensor (BAYSENS077*)

This sensor can be used with BAYSENS106*, 108*, 110*, 800* remote panels. When this sensor is wired to a BAYSENS800* remote panel, wiring must be 18 AWG Shielded Twisted Pair (Belden 8760 or equivalent). Refer to the specific remote panel for wiring details.

Thermostat

The unit must have a thermostat to operate.

- BAYSTAT151

  One Heat/One Cool Auto changeover digital display thermostat.

- BAYSTAT155

  Three Heat/Two Cool Auto changeover display thermostat.

- BAYSENS150

  Three Heat/Two Cool Auto changeover digital display thermostat. Seven-day programmable thermostat with night setback.

Digital Display Zone Sensor(BAYSENS135*)

LCD display provides heat, cool, auto, on, and off status. Display includes two temperature setpoints and a lockable setting with °F or °C indicators.

Thermostat (TCONT402AN32DA)

This thermostat is a multi-stage three heat/two cool, auto changeover digital display thermostat. It is a nonprogrammable, wall-mounted thermostat, and it can be used for economizer operation.

CO_2Sensor — Symbio™ 700 with Economizer Demand Control Ventilation (DCV)

Demand Control Ventilation (DCV) eliminates over-ventilation by closing the fresh air damper further than non-CO_2 sensing systems and reducing power consumption. DCV adjusts the fresh air damper between a DCV Minimum Position and Design Minimum Position. DCV Minimum Position equals non-CO_2 sensing systems minimum damper position - 10%, or more, down to 0% open. When the CO_2 level is greater than or equal to the DCV Minimum CO_2 setpoint, supply fan energizes and fresh air damper modulates between the DCV Minimum Position Setpoint and the Design Minimum Setpoint, increasing the amount of outdoor air flow and reducing the CO2 level in the space. The damper will open up to the Design Minimum Position Setpoint only. If the CO_2 level drops below the DCV Minimum CO_2 Setpoint - 50ppm the fresh air damper will drive to the DCV Minimum Position. If CO_2 level rises above the Building CO_2 setpoint, the fresh air damper will open to the Design Minimum Position setpoint.

Dimensional Data

Below figure illustrates the minimum operating and service clearances for either a single or multiple unit installation. These clearances are the minimum distances necessary to assure adequate serviceability, cataloged unit capacity, and peak operating efficiency.

Providing less than the recommended clearances may result in condenser coil starvation, “short-circuiting” of exhaust and economizer airflows, or recirculation of hot condenser air.

Figure 1. Typical installation clearance for single and multiple unit applications

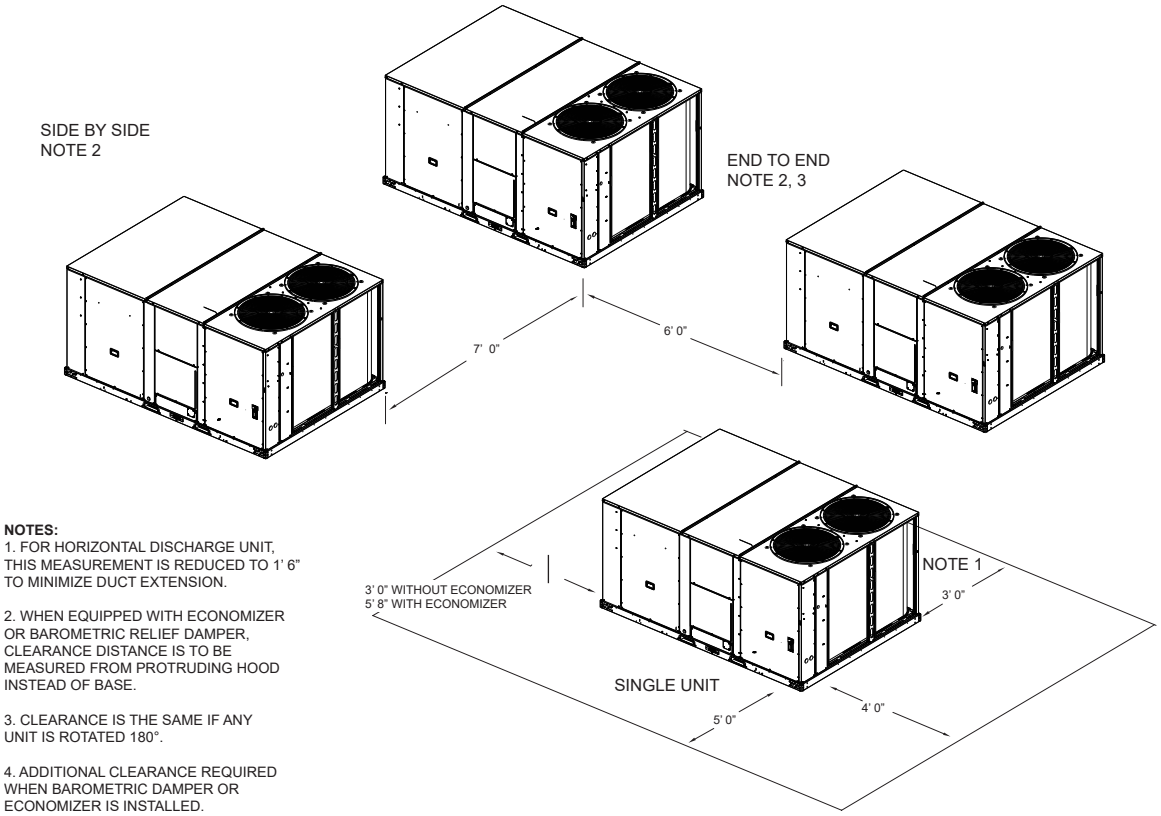

Figure 2. Cooling with optional electrical heat — overview (electric/electric)

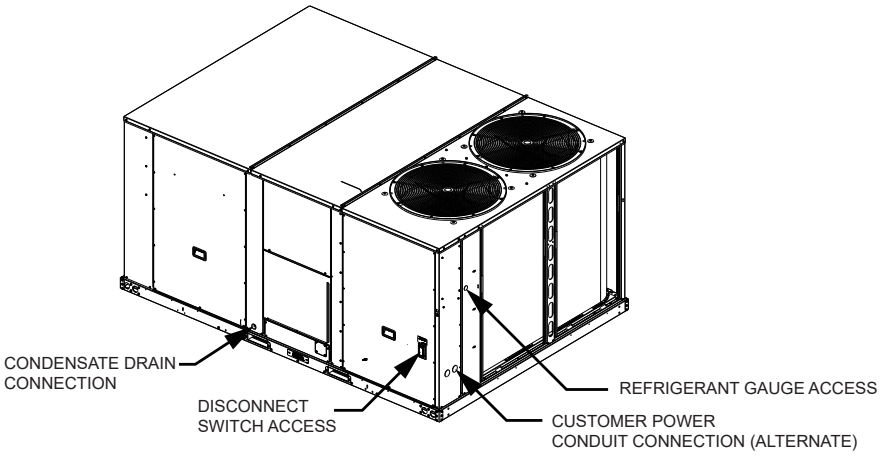

Figure 3. Cooling with optional electrical heat — front and side views (electric/electric)

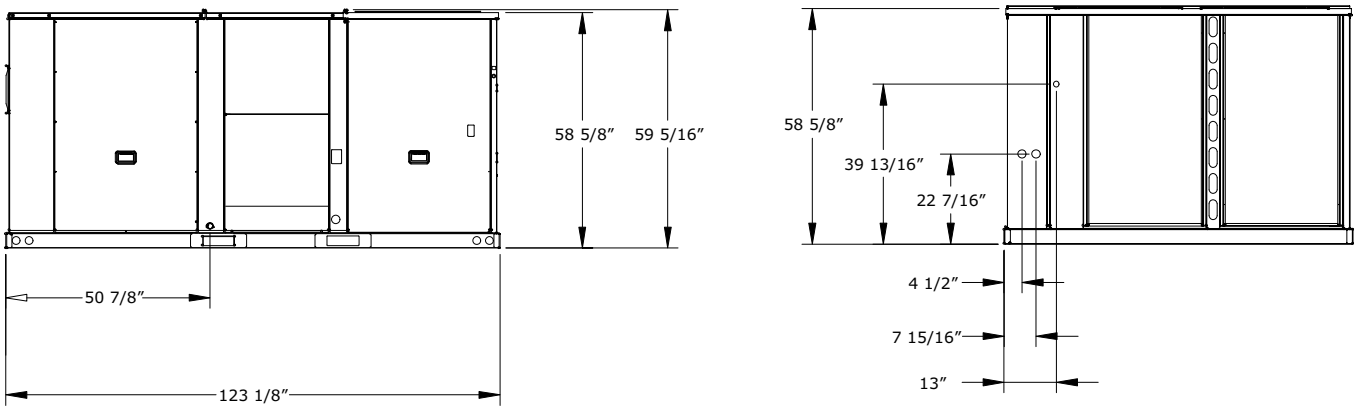

NOTES:
1.THROUGH THE BASE ELECTRICAL IS NOT STANDARD ON ALL UNITS.
2.VERIFY WEIGHT, CONNECTION, AND ALL DIMENSIONS WITH INSTALLER DOCUMENTS BEFORE INSTALLATION.

Figure 4. Cooling with optional electrical heat units— plain view

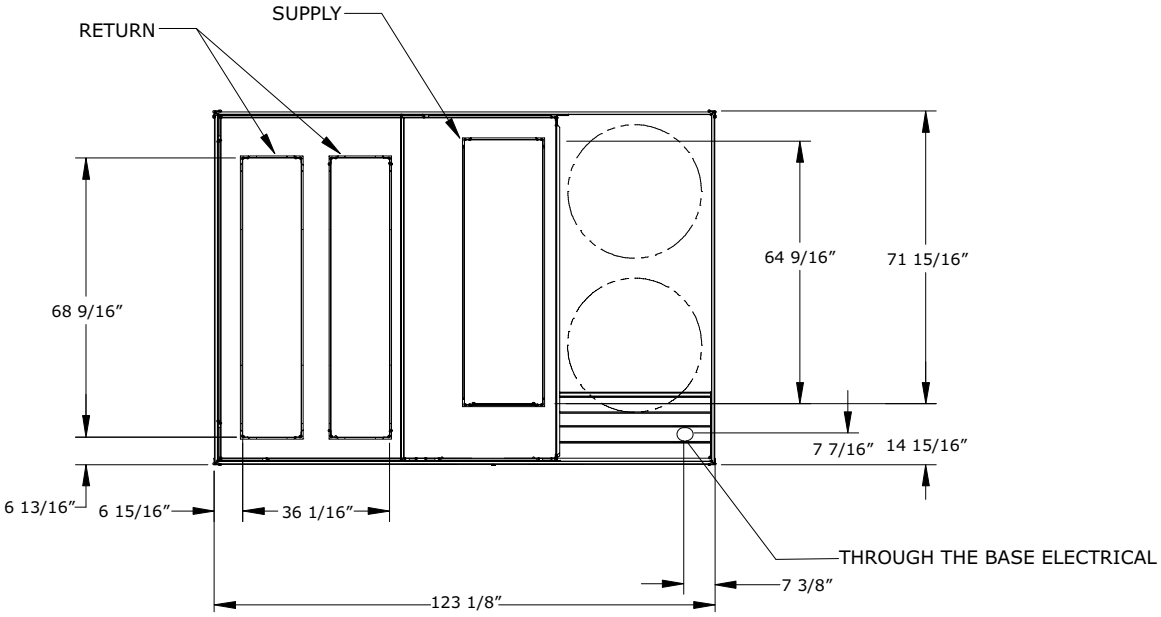

NOTES:
1.THRU-THE-BASE ELECTRICAL IS NOT STANDARD ON ALL UNITS.
2.VERIFY WEIGHT, CONNECTION, AND ALL DIMENSIONS WITH INSTALLER DOCUMENTS BEFORE INSTALLATION.

Figure 5. Cooling with optional electrical heat units — back view (horizontal configuration)

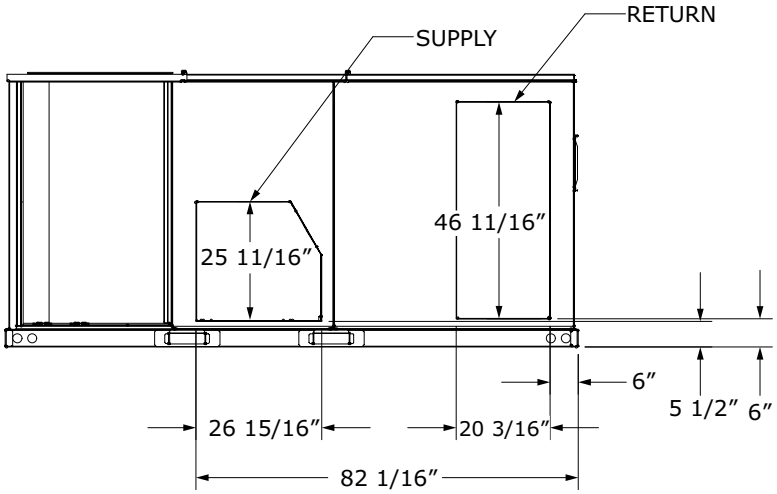

Figure 6. Cooling with optional electrical heat — roof crub

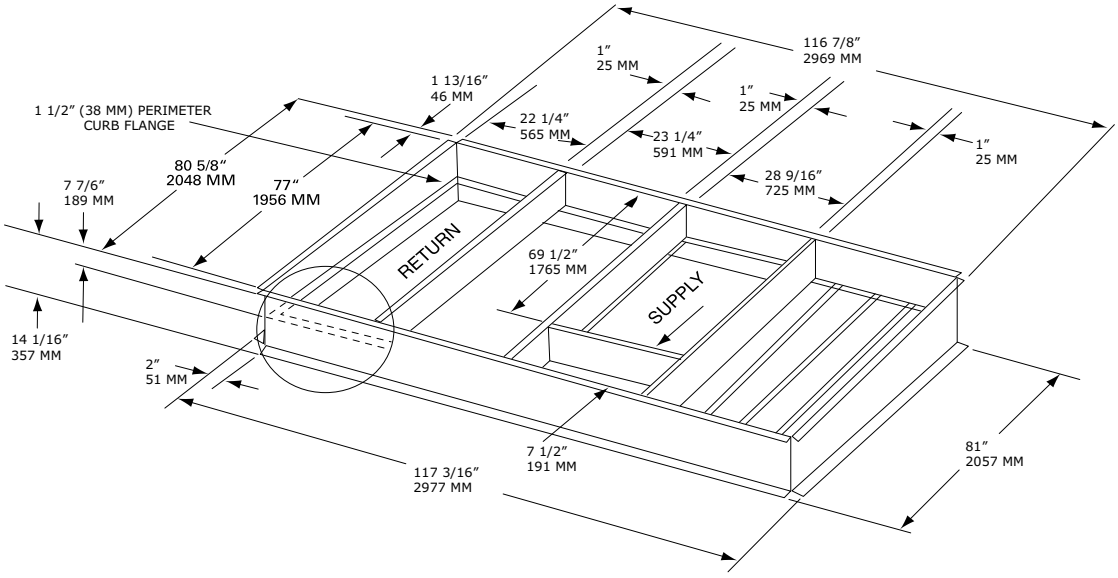

Figure 7. Cooling with optional electrical heat — downflow duct connections—field fabricated

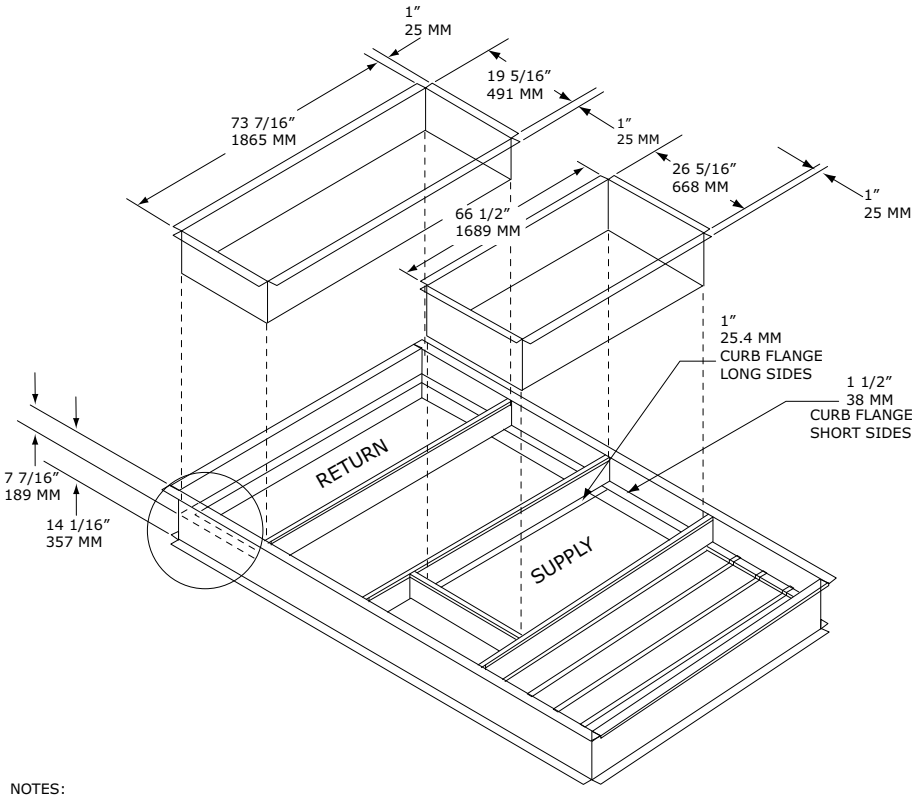

NOTES:
- DUCT FLANGES MOUNT 7-7/16″ DOWN INSIDE THE CURB ON THE 1-1½″ CURB FLANGES.
- ROOFCURB IS INTENDED FOR DOWNFLOW USE ONLY.

Figure 8. Cooling with optional electric heat — downflow unit clearance

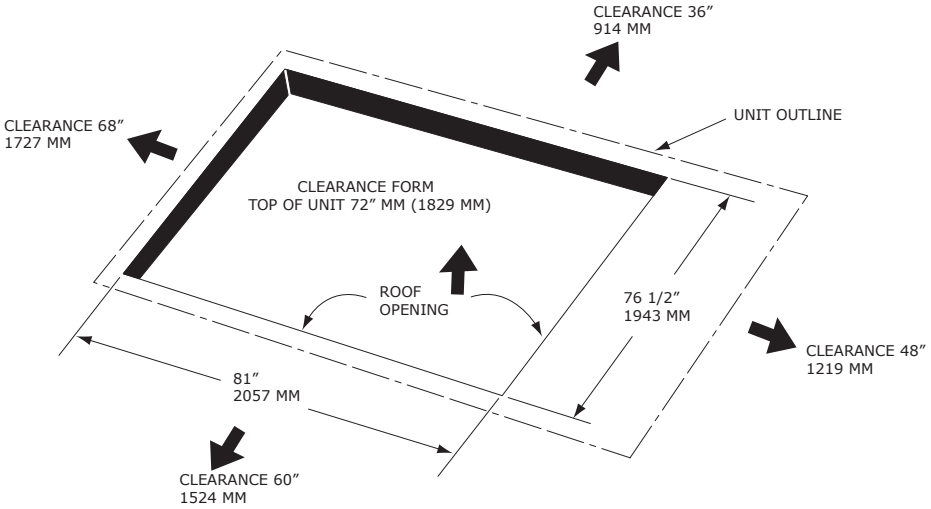

Figure 9. Cooling with optional electric heat — barometric relief and economizer

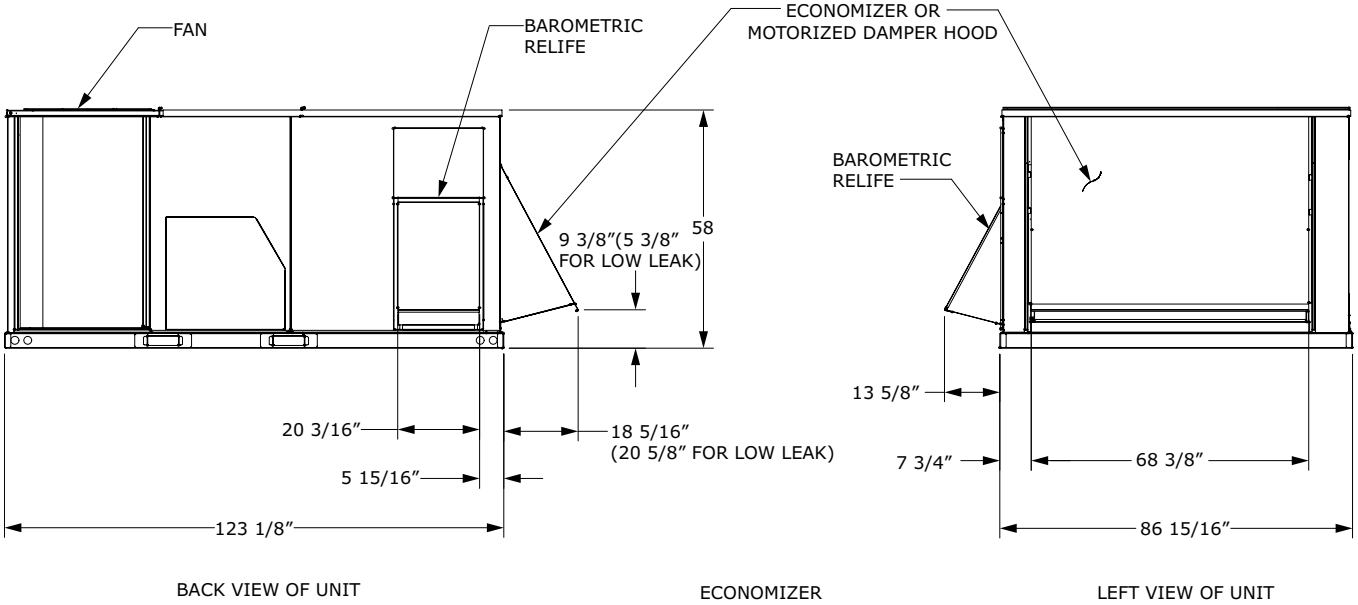

NOTES:
1. VERIFY WEIGHT, CONNECTION AND ALL DIMENSIONS WITH INSTALLER DOCUMENTS BEFORE INSTALLATION.
2.BAROMETRIC RELIEF IS FOR USE WITH A DOWNFLOW ECONOMIZER ONLY.

Figure 10. Cooling with optional electric heat — manual damper

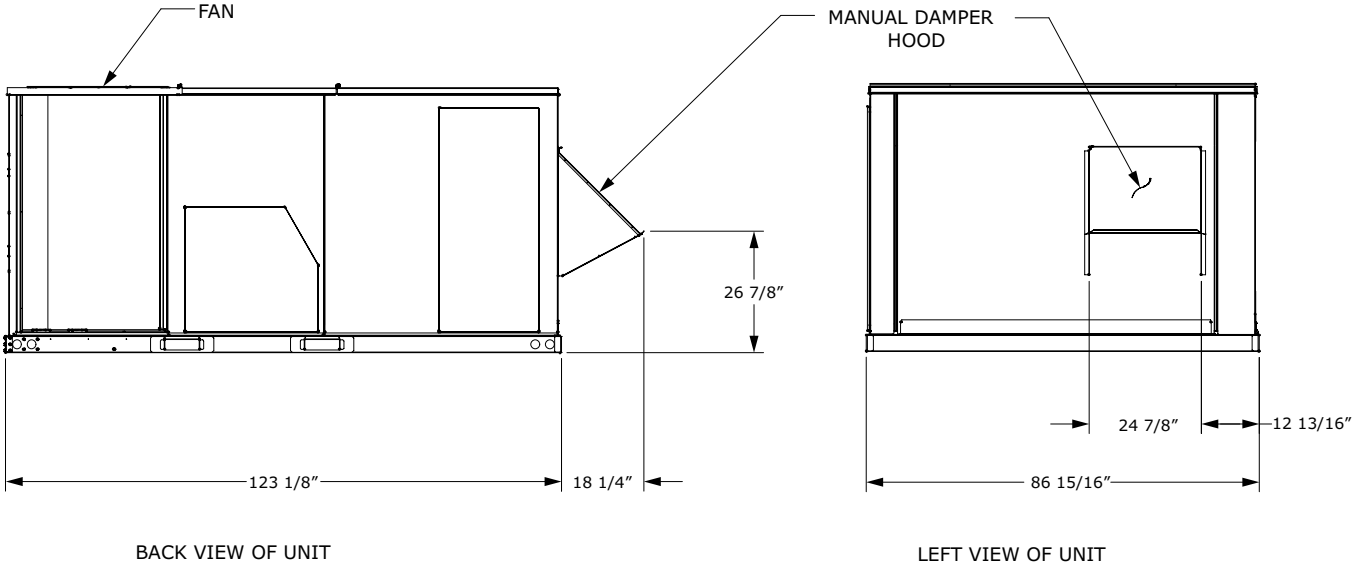

NOTE:
VERIFY WEIGHT, CONNECTION, AND ALL DIMENSIONS WITH INSTALLER DOCUMENTS BEFORE INSTALLATION.

Weights

Table 1. Maximum unit and corner weights (lb) and center of gravity dimensions (in.)

Tons	Unit Model No.	Weights (lb)[a], [b]		Corner Weights[c]				Center of Gravity (in.)	
		Shipping	Net	A	B	C	D	Length	Width
15	EDK180A	2216	1891	629	513	337	413	55	34
17.5	EDK210A	2221	1896	630	514	338	414	55	34
20	EDK240A	2227	1902	628	495	343	435	54	36
25	EDK300A	2263	1938	640	505	350	444	54	36

(a) Weights are approximate. Horizontal and downflow unit and corner weights may vary slightly.
(b) Weights do not include additional factory or field installed options/accessories.
(c) Corner weights are given for information only. 15 to 25 ton models must be supported continuously by a curb or equivalent frame support.

Figure 11. Corner weights

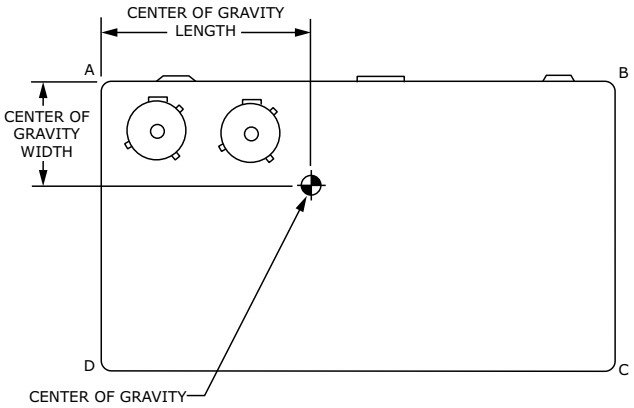

Rigging

⚠ WARNING

Heavy Object!

Failure to follow instructions below could result in unit dropping which could result in death or serious injury, and equipment or property-only damage.

Ensure that all the lifting equipment used is properly rated for the weight of the unit being lifted. Each of the cables (chains or slings), hooks, and shackles used to lift the unit must be capable of supporting the entire weight of the unit. Lifting cables (chains or slings) may not be of the same length. Adjust as necessary for even unit lift.

⚠ WARNING

Improper Unit Lift!

Failure to properly lift unit in a LEVEL position could result in unit dropping and possibly crushing operator/technician which could result in death or serious injury, and equipment or property-only damage.

Test lift unit approximately 24 inches (61 cm) to verify proper center of gravity lift point. To avoid dropping of unit, reposition lifting point if unit is not level.

See the Figure 12, p. 17 and for typical unit operating weights rigging before proceeding.

1. Remove the shipping crate from around the unit. Once fork trucking is complete, and unit is ready to place on the curb, remove all fork access brackets to drop the shipping boards from underneath the unit (4 brackets standard forking, 6 brackets for 3 sided forking). Do not remove the crating from the top of the unit.
2. Rig the unit as shown in Figure 12, p. 17. Attach adequate strength lifting slings to all four lifting brackets in the unit base rail. Do not use cables, chains, or slings except as shown.
3. Install a lifting bar, as shown in Figure 12, p. 17, to protect the unit and to facilitate a uniform lift. The minimum distance between the lifting hook and the top of the unit should be 7 feet.
4. Test-lift the unit to ensure it is properly rigged and balanced, make any necessary rigging adjustments.
5. Lift the unit and position it into place.
6. Downflow units; align the base rail of the unit with the curb rail while lowering the unit onto the curb. Make sure that the gasket on the curb is not damaged while positioning the unit.

Figure 12. Rigging and center of gravity data

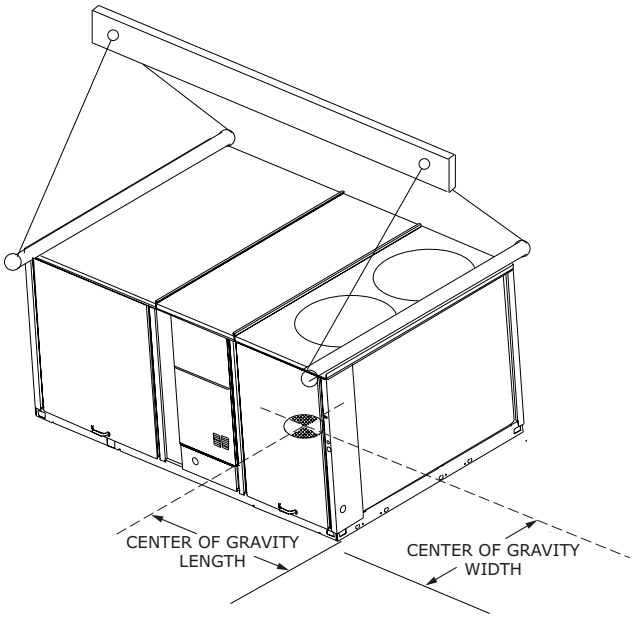

A2L Information and Installation Requirements

Installation/Code Compliance Requirements

Building level controls may need to be upgraded/modified to demand leak mitigation actions as described in "Leak Detection System (Refrigerant charge greater than 3.91 lb per circuit)," p. 22. Those actions include, but are not limited to, fully opening damper and VAV boxes (if present), and disabling electric heat in VAV boxes (if present).

Verify the equipment refrigerant charge is in accordance with the room area limitation as described in Minimum Room Area Limits section.

Ensure that there are labels on the equipment stating it contains a flammable refrigerant.

A2L Work Procedures

⚠ WARNING

Risk of Fire — Flammable Refrigerant!

Failure to follow instructions below could result in death or serious injury, and equipment damage.

- **To be repaired only by trained service personnel.**
- **Do not puncture refrigerant tubing.**
- **Dispose of properly in accordance with federal or local regulations.**
- **The equipment shall be stored in a room without continuously operating ignition sources.**

⚠ WARNING

Refrigerant under High Pressure!

Failure to follow instructions below could result in an explosion which could result in death or serious injury or equipment damage.

System contains refrigerant under high pressure. Recover refrigerant to relieve pressure before opening the system. See unit nameplate for refrigerant type. Do not use non-approved refrigerants, refrigerant substitutes, or refrigerant additives.

⚠ WARNING

Hazardous Voltage!

Failure to disconnect power before servicing could result in death or serious injury.

Disconnect all electric power, including remote disconnects before servicing. Follow proper lockout/tagout procedures to ensure the power can not be inadvertently energized. Verify that no power is present with a voltmeter.

The units described in this manual use R-454B refrigerant. Use ONLY R-454B rated service equipment or components with these units. For specific handling concerns with R-454B, contact your local Trane representative.

Installation, repair, removal, or disposal should be performed by trained service personnel.

At all times, Trane's maintenance and service guidelines shall be followed. If in doubt, contact Trane technical support for assistance.

Servicing

Prior to initiating work on equipment, check the area with an appropriate refrigerant detector. Ensure the service personnel are properly trained regarding work in potentially toxic or flammable atmospheres. Ensure that the leak detection equipment being used is suitable for use with all applicable refrigerants, i.e. non-sparking, adequately sealed, or intrinsically safe. Be aware that the refrigerant does not contain an odor.

If any hot work is to be conducted on the refrigerating equipment or any associated parts, appropriate fire extinguishing equipment shall be available on hand. A dry powder or CO_2 fire extinguisher should be located adjacent to the charging area.

At all times, Trane's maintenance and service guidelines shall be followed. If in doubt, contact Trane technical support for assistance.

All maintenance staff and others working in the local area shall be instructed on the nature of the work being carried out. Work in confined spaces shall be avoided.

Ignition Source Mitigation

Do not use any sources of ignition when working on the refrigeration system.

Keep all ignition sources, including cigarette smoking, away from the site of installation, repair, removal or disposal, during which refrigerant can potentially be released to the surrounding space.

Survey the area around the equipment before initiating work to ensure no flammable hazards or ignition risks are present.

"No Smoking" signs shall be displayed.

Do not use devices that can be a source of ignition to accelerate defrosting of components. Use only defrost and cleaning procedures recommended by Trane. Do not pierce or burn.

Ventilation

Ensure that the area is in the open or that it is adequately ventilated before breaking into the system or conducting any hot work. A degree of ventilation shall continue during the period that the work is carried out. The ventilation should safely disperse any released refrigerant and preferably expel it externally into the atmosphere. If present, check that the ventilation system, including outlets, are operating adequately and are not obstructed.

Refrigerating Equipment

Refrigerant piping or components should not be installed in locations where substances which may corrode them are present.

Check that equipment hazard markings are visible and legible. Replace them if they are not.

For equipment using secondary fluids, like water or glycol, check that refrigerant is not present in the secondary fluid loop before conducting any hot work.

Electrical Devices

Do not apply power to the circuit if a fault exists which compromises safety. If the fault cannot be corrected immediately, but it is necessary to continue operation, an adequate temporary solution shall be used. This shall be reported to the owner of the equipment, so all parties are advised.

Initial safety checks shall include:

- Cabling is not subject to wear, corrosion, excessive pressure, vibration, sharp edges, or any other adverse environmental effects. Account for the effects of aging or continual vibration from sources such as compressors or fans.
- Capacitors are discharged. This shall be done in a safe manner to avoid possibility of sparking.
- No live electrical components and wiring are exposed while charging, recovering, or purging the system.
- Verify continuity of earth bonding.
- Replace electrical components with Trane replacement parts, or those meeting the same ratings and qualified for flame arrest protection, UL LZGH2 category.

Leak Detection

Never use an open flame to detect leaks. A halide torch should not be used. Use only approved leak detection methods per this instruction manual.

The following leak detection methods are deemed acceptable for all refrigerant systems.

Electronic leak detectors may be used to detect refrigerant leaks but, in the case of flammable refrigerants, the sensitivity may not be adequate, or may need re-calibration. (Detection equipment shall be calibrated in a refrigerant-free area.) Verify the detector is not a potential source of ignition and is suitable for the refrigerant used. Leak detection equipment shall be set at a percentage of the LFL gas (25% maximum) is confirmed.

Leak detection fluids are also suitable for use with most refrigerants but the use of detergents containing chlorine shall be avoided as the chlorine may react with the refrigerant and corrode the copper pipe-work.

Examples of leak detection fluids are:

- Bubble method
- Fluorescent method agents

If a leak is suspected, all naked flames shall be removed/extinguished.

If a refrigerant leak is found which requires brazing, all refrigerant shall be recovered from the system, or isolated (by means of shut-off valves) in a part of the system remote from the leak.

Refrigerant Removal and Evacuation

Ensure that the correct number of cylinders for holding the total system charge is available. All cylinders to be used are designated for the recovered refrigerant and labeled for that refrigerant (special cylinders for the recovery of refrigerant, for example). Cylinders shall be complete with pressure-relief valve and associated shut-off valves in good working order. Empty recovery cylinders are evacuated and, if possible, cooled before recovery occurs.

When breaking into the refrigerant circuit to make repairs – or for any other purpose – conventional procedures shall be used. However, for flammable refrigerants it is important that best practice be followed, since flammability is a consideration.

The following procedure shall be adhered to:

1. Safely remove refrigerant following local and national regulations.
2. Evacuate.
3. Purge the circuit with inert gas.
4. Evacuate (optional for A2L).
5. Continuously flush or purge with inert gas when using flame to open circuit.
6. Open the circuit.

Prior to refrigerant removal, open all appropriate valves, including solenoid and electronic expansion valves (EXVs). Use control settings, where available. When not available, manually open all electronically controlled valves using acceptable service procedures.

The recovery equipment shall be in good working order with instructions available. Equipment shall be suitable for the recovery of the flammable refrigerant. For specific handling concerns, contact the manufacturer. Ensure all hose connections are checked for tightness to avoid refrigerant leaks.

In addition, a set of calibrated weighing scales shall be available and in good working order.

The refrigerant shall be recovered into the correct recovery cylinders if venting is not allowed by local and national codes. Do not mix refrigerants in recovery unit and especially not in cylinders.

Refrigerant recovery unit should be purged with an inert gas after each use or before using with a different refrigerant Class – for example, A2L to A1.

If compressors or compressor oils are to be removed, ensure that they have been evacuated to an acceptable level to make certain that flammable refrigerant does not remain within the lubricant. The compressor body shall not be heated by an open flame or other ignition sources to accelerate this process. When oil is drained from a system, it shall be carried out safely.

The system shall be purged with oxygen-free nitrogen to render the appliance safe for flammable refrigerants. This process might need to be repeated several times. Compressed air or oxygen shall not be used for purging refrigerant systems.

The system shall be vented down to atmospheric pressure to enable work to take place.

The outlet for the vacuum pump shall not be close to any potential ignition sources, and ventilation shall be available.

Refrigerant Charging

In addition to conventional charging procedures, the following requirements shall be followed.

- Ensure that contamination of different refrigerants does not occur when using charging equipment.
- Hoses or lines shall be as short as possible to minimize the amount of refrigerant contained in them.
- Cylinders shall be kept in an appropriate position according to the instructions.
- Ensure that the refrigerating system is earthed prior to charging the system with refrigerant.
- Label the system when charging is complete (if not already).
- Extreme care shall be taken not to overfill the refrigerating system.

Prior to recharging the system, it shall be pressure-tested with the appropriate purging gas. The system shall be leak-tested on completion of charging but prior to commissioning. A follow up leak test shall be carried out prior to leaving the site.

Prior to refrigerant charging, open all appropriate valves, including solenoid and electronic expansion valves (EXVs). Use control settings, where available. When not available, manually open all electronically controlled valves using acceptable service procedures.

Verify the equipment refrigerant charge is in accordance with the room area limitation as described in Minimum Room Area Limits section.

Decommissioning

Before carrying out the decommissioning procedure, it is essential that the trained service personnel is completely familiar with the equipment and all its details. It is recommended good practice that all refrigerants are recovered safely. Prior to the task being carried out, an oil and refrigerant sample shall be taken in case analysis is required prior to re-use of recovered refrigerant. It is essential that electrical power is available before the task is commenced.

1. Become familiar with the equipment and its operation.
2. Isolate system electrically.
3. Before attempting the procedure, ensure that:
    a. Mechanical handling equipment is available, if required, for handling refrigerant cylinders.
    b. All personal protective equipment is available and being used correctly.
    c. The recovery process is supervised at all times by a competent person.
    d. Recovery equipment and cylinders conform to the appropriate standards.
4. Pump down refrigerant system, if possible.
5. If a vacuum is not possible, make a manifold so that refrigerant can be removed from various parts of the system.
6. Make sure that cylinder is situated on the scales before recovery takes place.
7. Start the recovery machine and operate in accordance with instructions.
8. Do not overfill cylinders (no more than 80% volume liquid charge).
9. Do not exceed the maximum working pressure of the cylinder, even temporarily.
10. When the cylinders have been filled correctly and the process completed, make sure that the cylinders and the equipment are removed from site promptly and all isolation valves on the equipment are closed off.
11. Recovered refrigerant shall not be charged into another refrigerating system unless it has been cleaned and checked.
12. When equipment has been decommissioned, attach a signed and dated label stating it has been decommissioned and emptied of refrigerant.
13. Ensure that there are labels on the equipment stating it contains flammable refrigerant.

A2L Application Considerations

This product is listed to UL standard 60335-2-40, Household and Similar Electrical Appliances – Safety – Part 2-40: Particular Requirements for Electrical Heat Pumps, Air-Conditioners and Dehumidifiers, which defines safe design and use strategies for equipment using A2L

refrigerants. This standard limits the refrigerant concentration in a space in the event of a refrigerant leak. To meet the requirements, the UL standard defines minimum room area, refrigerant charge limit, minimum circulation airflow and/or ventilation airflow requirements, and limits the use of ignition sources in spaces. The standard may require a unit refrigerant leak detection system.

For equipment with R-454B and charge amounts less than or equal to 3.91 lbs per circuit, this UL standard does not prescribe a room area limit and does not require a refrigerant leak detection system or any circulation airflow or ventilation airflow mitigation strategies. However, ignition sources in ductwork must be evaluated.

Depending on the application, a specific requirement of ANSI/ASHRAE Standard 15, Safety Standard for Refrigeration Systems, could be more stringent than UL 60335-2-40 requirements. See *Refrigeration Systems and Machinery Rooms Application Considerations for Compliance with ASHRAE® Standard 15-2022 Application Engineering Manual* (APP-APM001*-EN) for more information.

Ignition Sources in Ductwork

Do not install open flames in the ductwork. Hot surfaces exceeding 700°C (1290°F) should not be installed in the ductwork unless the average airflow velocity is not less than 1.0 m\s (200 ft\min) across the heater and proof of airflow is verified before system is energized.

Electric heaters can exceed the surface temperature limit if airflow distribution is poor, or insufficient airflow is provided over the heater.

Surface temperatures of most gas heaters do not exceed the surface temperature limits due to ANSI construction requirements.

Ignition Sources in Unit

This unit does not contain any ignition sources. All potential ignition sources, (including factory or field installed accessory electric heaters, gas heaters, relays, and contactors) were evaluated during product UL listing.

Minimum Room Area Limits (Refrigerant charge greater than 3.91 lb per circuit)

Equipment with R–454B charge amounts greater than 3.91 lb per circuit may require additional circulation or ventilation airflow mitigation strategies. In this case, two minimum room area (A_{min}) thresholds:

- The first threshold defines when equipment serving a single room is required to provide circulation airflow, either continuous or activated by a leak detection system. A ducted system requires circulation airflow unless the smallest room it serves is larger than the adjusted A_{min} threshold. This product contains a leak detection system if a circuit charge is greater than 3.91 lbs. As a result, no further leak detection system evaluation is required.
- The second threshold defines when additional ventilation airflow is required. If the room area, A or TA, is below the adjusted A_{min} or TA_{min} threshold, additional ventilation is required to remove refrigerant in the event of a leak. See the UL 60335-2-40 Clause GG.8 and ANSI\ASHRAE Standard 15 Section 7 for natural and mechanical ventilation requirements.

Table 2. Minimum room area

Tonnage	Charge		Minimum Room Area	
	lbs	kg	ft²	m²
15	12.6	5.7	189.4	17.6
17.5	13.5	6.1	202.7	18.8
20	15.2	6.9	227.9	21.2
25	14.4	6.5	215.2	20.0

Minimum Room Area (A_{min}) Adjustments

Use equation below to adjust the minimum room area, as applicable, based on the unit's installation height, altitude, and occupancy level it serves.

$$A_{min.adj} = \text{Nameplate } A_{min} \times \text{Altitude Adj} \times \text{Height Adj} \times F_{occ}$$

Multiply the altitude adjustment factor in the table below by A_{min} listed on the unit nameplate or in the Installation, Operation, and Maintenance (IOM) manual.

Table 3. Altitude adjustment factor

Altitude (ft)	Sea Level to 2000	2001 to 4000	4001 to 6000	6001 to 8000	8001 to 10000	10001 to 12000	12001 to 14000	14001 to 15000	Over 15000
A_{min} Adjustment	1	1.05	1.11	1.17	1.24	1.32	1.41	1.51	1.57

In addition, A_{min} can be adjusted if the unit is installed in a room at a height that is higher than the minimum height shown on the unit. To adjust A_{min}, multiply by the ratio of the unit minimum release height (in meters) / actual release height (in meters). Use 0.6 m in the ratio for unit minimum installation heights less than or equal to 0.6 m.

For institutional occupancies, ASHRAE Standard 15 applies an additional adjustment factor F_{occ} to the amount of a charge allowed in a space. To calculate the adjusted A_{min} for institutional occupancies, multiply the A_{min} on the nameplate by two.

EXAMPLE 1: 20 Ton Packaged Rooftop Multi-Zone VAV System Serving an Institutional Occupancy Space

The packaged unit serves 7600 ft.^{2} of a nursing home located at an attitude of 4000 ft. The unit has two equally charged 10 ton refrigeration circuits. Each circuit has 12 lbs of refrigerant with a minimum room area requirement of 180 ft.^{2} with a 2.2 m release height.

$$TA_{min.adj} = 180\ ft.^2 \times 1.05 \times 2 = 378\ ft.^2$$

No additional ventilation is required.

EXAMPLE 2: 10 Ton Split System Serving a Single Commercial Occupancy Space

The split system serves a 1500 ft.^{2} manufacturing space at 5000 ft. altitude. The final installed charge of the single circuit 10 ton unit is 20 lb. The unit has an open return with a release height of 1 m and ducted supply air. The unit A_{min} is 660 ft.^{2}.

$$A_{min.adj} = 660\ ft.^2 \times 1.11 = 733\ ft.^2$$

No additional ventilation is required.

Determining Room Area (A or TA)

The room area (A) is the room area enclosed by the projection to the floor of the walls, partitions, and doors of the space that the equipment serves. For ducted systems, total room area (TA) of all rooms connected by ducts, may be used instead of A.

Rooms connected by drop ceilings only are not considered a single room.

Rooms on the same floor of the building, and connected by an open passageway, can be considered part of the same room if the passageway is a permanent opening, extends to the floor and is intended for people to walk through.

Adjacent rooms on the same floor of the building and connected by permanent openings in the walls and/or doors between rooms (including gaps between the wall and the floor), can be considered part of the same room if the openings meet the following criteria.

- The opening is permanent and cannot be closed.
- Openings extending to the floor, such as door gaps, need to be at least 20 mm above the floor covering surface.
- Natural ventilations opening areas must meet the requirements of ANSI\ASHRAE Standard 15-2022, Section 7.2.3.2.

Rooms that are connected by a mechanical ventilation system can be considered a single room area if the mechanical ventilation system meets the requirements of ANSI\ASHRAE Standard 15-2022, Section 7.6.4.

Leak Detection System (Refrigerant charge greater than 3.91 lb per circuit)

The leak detection system consists of one or more refrigerant detection sensors. When the system detects a leak, the following mitigation actions will be initiated until refrigerant has not been detected for at least 5 minutes:

- Energize the supply fan(s) to deliver a required minimum amount of circulation airflow.
- Disable compressor operation.
- Provide an output signal that can be used to fully open zone dampers and/or VAV boxes and disable electric heat in VAV boxes.
- Provide an output signal that can be used to energize additional mechanical ventilation (if needed).
- Units without airflow proving will disable electric heat sources.

Building fire and smoke systems may override this function.

If the refrigerant sensor has a fault, is at the end of its life, or is disconnected, the unit will initiate the mitigation actions. Mitigation actions may be verified by disconnecting the sensor.

The refrigerant sensors do not need service. Use only manufacturer-approved sensors when replacement is required.

Installation

Unit Foundation

⚠ WARNING

Risk of Roof Collapsing!

Failure to ensure proper structural roof support could cause the roof to collapse, which could result in death or serious injury and property damage.

Confirm with a structural engineer that the roof structure is strong enough to support the combined weight of the roofcurb, the unit, and any accessories.

NOTICE

Water Damage!

Failure to follow instructions below could result in equipment and property damage.

Non-factory penetrations through the base of this unit are not allowed. Any penetration in the base of the unit may affect the water tight integrity of the unit and lead to water leaks into the conditioned space.

NOTICE

Roof Damage!

System contains oil and refrigerant under high pressure. Roofs should be protected from exposure to oils and refrigerant in the system. If rooftop is not protected, damage to the roof may occur.

Important: *Refer to local building codes for proper installation. All installation must comply with local building codes.*

Horizontal Units

Notes:

- *For complete step by step instructions on how to install a Horizontal Conversion Kit, see Horizontal Duct Conversion Kit Foundation™ Packaged Rooftop Units 15 to 25 Tons Installation Instructions (ACC-SVN159*- EN).*
- *For units with optional Condensate Overflow Switch (COF) , the switch will not work properly if unit is not level or slightly sloped toward switch.*
- *To assure proper condensate flow during operation the unit and the curb must be level.*

If the unit is installed at ground level, elevate it above the snow line. Provide concrete footings at each support location with a full perimeter support structure or a slab foundation for support. Refer to for the unit's operating and point loading weights when constructing a footing foundation.

If anchoring is required, anchor the unit to the slab using hold down bolts or isolators. Isolators should be installed to minimize the transmission of vibrations into the building.

For rooftop applications, if anchoring is required, anchor the unit to the roof with hold-down bolts or isolators.

Check with a roofing contractor for proper waterproofing procedures.

Ductwork

Elbows with turning vanes or splitters are recommended to minimize air noise due to turbulence and to reduce static pressure.

When attaching the ductwork to the unit, provide a watertight flexible connector at the unit to prevent operating sounds from transmitting through the ductwork.

All outdoor ductwork between the unit and the structure should be weather proofed after installation is completed.

Note: *For sound consideration, cut only the holes in the roof deck for the ductwork penetrations. Do not cut out the entire roof deck within the curb perimeter.*

If a Curb Accessory Kit is not used:

1. The ductwork can be attached directly to the factory-provided flanges around the unit's supply and return air openings. Be sure to use flexible duct connections at the unit.
2. For built-up curbs supplied by others, gaskets must be installed around the curb perimeter flange and the supply and return air opening flanges.

General Unit Requirements

⚠ WARNING

Proper Field Wiring and Grounding Required!

Failure to follow code could result in death or serious injury.

All field wiring MUST be performed by qualified personnel. Improperly installed and grounded field wiring poses FIRE and ELECTROCUTION hazards. To avoid these hazards, you MUST follow requirements for field wiring installation and grounding as described in NEC and your local/state/national electrical codes.

The checklist listed below is a summary of the steps required to successfully install a commercial unit. This checklist is intended to acquaint the installing personnel with what is required in the installation process. It does not replace the detailed instructions called out in the applicable sections of this manual.

☐ Check the unit for shipping damage and material shortage; file a freight claim and notify appropriate sales representative.

☐ Verify correct model, options and voltage from nameplate.

- ☐ Verify that the installation location of the unit will provide the required clearance for proper operation.
- ☐ Assemble and install the roof curb (if applicable). Refer to the latest edition of the curb installers guide that ships with each curb kit.
- ☐ Fabricate and install ductwork; secure ductwork to curb.
- ☐ Rigging the unit.
- ☐ Set the unit onto the curb; check for levelness.
- ☐ Ensure unit-to-curb seal is tight and without buckles or cracks.
- ☐ Install and connect a condensate drain line to the evaporator drain connection.

Factory Installed Economizer

- Ensure the economizer has been pulled out into the operating position. Refer to the standard or low leak economizer Installation Instructions for proper position and setup.
- Install all access panels.

Controller Wiring Schematic - LLE

For additional information, see *0-100% Low Leak Economizer Downflow/Horizontal Foundation™ Packaged Rooftop Units 15 to 25 Tons Installation Instructions* (ACC-SVN311*-EN).

Main Electrical Power Requirements

⚠ WARNING

Hazardous Voltage w/Capacitors!

Failure to disconnect power and discharge capacitors before servicing could result in death or serious injury.

Disconnect all electric power, including remote disconnects and discharge all motor start/run capacitors before servicing. Follow proper lockout/tagout procedures to ensure the power cannot be inadvertently energized. For variable frequency drives or other energy storing components provided by Trane or others, refer to the appropriate manufacturer's literature for allowable waiting periods for discharge of capacitors. Verify with a CAT III or IV voltmeter rated per NFPA 70E that all capacitors have discharged.

⚠ WARNING

Proper Field Wiring and Grounding Required!

Failure to follow code could result in death or serious injury.

All field wiring MUST be performed by qualified personnel. Improperly installed and grounded field wiring poses FIRE and ELECTROCUTION hazards. To avoid these hazards, you MUST follow requirements for field wiring installation and grounding as described in NEC and your local/state/national electrical codes.

- ☐ Verify that the power supply complies with the unit nameplate specifications.
- ☐ Inspect all control panel components; tighten any loose connections.
- ☐ Connect properly sized and protected power supply wiring to a field-supplied/ installed disconnect switch and to the main power terminal block (HTB1) in the unit control panel.
- ☐ Install proper grounding wires to an earth ground. See Table 4, p. 24 for ground wire torque.

Table 4. Ground wire torque

Ground wire size (AWG)	Torque (in-lbs)
10 - 14	35
8	40
4 - 6	45
2/0 - 0	50

Note: *All field-installed wiring must comply with NEC and applicable local codes.*

Electric Heat Requirements

- Verify that the power supply complies with the electric heater specifications on the unit and heater nameplate.
- Inspect the heater junction box and control panel; tighten any loose connections.
- Check electric heat circuits for continuity.
- Low Voltage Wiring (AC and DC) Requirements.
- Install the zone thermostat, with or without switching subbase.
- Connect properly sized control wiring to the proper termination points between the zone thermostat and the unit control panel.

Condensate Drain Configuration

An evaporator condensate drain connection is provided on each unit. Refer to "Dimensional Data," p. 11 for the appropriate drain location.

Note: *Use 1-inch PVC pipe to connect to the drain pan outlet provided in the unit. This is a slip fit joint (no threads). Do not use PVC glue to connect condensate drain, thread sealing compound or Teflon tape may be used.*

A condensate trap must be installed at the unit due to the drain connection being on the “negative pressure” side of the fan.

A condensate drain line must be connected to the P-Trap. Pitch the drain lines at least 0.5-inch for every 10 feet of horizontal run to assure proper condensate flow. Do not allow the horizontal run to sag causing a possible doubletrap condition which could result in condensate backup due to “air lock”.

Filter Installation

Each unit ships with 2-inch filters installed. The quantity of filters is determined by unit size. Access to the filters is obtained by removing the filter access panel.

Refer to the unit Service Facts (shipped with each unit) for filter requirements

Note: *Do not operate the unit without filters.*

Field Installed MERV13 Filters

Optional MERV13 filters are available for purchase. Replace standard filters with MERV13 Filters according to the installation instructions provided in the kit.

Field-Installed Power Wiring

⚠ WARNING

Proper Field Wiring and Grounding Required!

Failure to follow code could result in death or serious injury.
All field wiring MUST be performed by qualified personnel. Improperly installed and grounded field wiring poses FIRE and ELECTROCUTION hazards. To avoid these hazards, you MUST follow requirements for field wiring installation and grounding as described in NEC and your local/state/national electrical codes.

An overall dimensional layout for the standard field installed wiring entrance into the unit is illustrated in the Dimensional Data chapter. To verify the unit’s supply power wiring is properly sized and installed, follow the guidelines outlined below.

Note: *All field-installed wiring must conform to NEC guidelines as well as state and Local codes.*

Verify that the power supply available is compatible with the unit’s nameplate ratings. The available supply power must be within 10 percent of the rated voltage stamped on the nameplate. Use only copper conductors to connect the power supply to the unit.

NOTICE

Use Copper Conductors Only!

Failure to use copper conductors could result in equipment damage as the equipment was not designed or qualified to accept other types of conductors.

Note: *If the unit is not equipped with an optional factory installed nonfused disconnect switch or circuit breaker, a field supplied disconnect switch must be installed at or near the unit in accordance with the National Electrical Code (NEC latest edition).*

Main Unit Power

⚠ WARNING

Hazardous Voltage!

Failure to disconnect power before servicing could result in death or serious injury.
Disconnect all electric power, including remote disconnects before servicing. Follow proper lockout/tagout procedures to ensure the power can not be inadvertently energized. Verify that no power is present with a voltmeter.

⚠ WARNING

Electrical Shock Hazard!

Failure to follow instructions below could result in death or serious injury.
Properly connect the system’s oversized protective earthing (grounding) terminal(s).

⚠ WARNING

Proper Field Wiring and Grounding Required!

Failure to follow code could result in death or serious injury.
All field wiring MUST be performed by qualified personnel. Improperly installed and grounded field wiring poses FIRE and ELECTROCUTION hazards. To avoid these hazards, you MUST follow requirements for field wiring installation and grounding as described in NEC and your local/state/national electrical codes.

Standard Wiring

The electrical service must be protected from over current and short circuit conditions in accordance with NEC requirements.

Protection devices must be sized according to the electrical data on the nameplate.

- If the unit is not equipped with an optional factory installed nonfused disconnect switch, a field supplied disconnect switch must be installed at or near the unit

in accordance with the National Electrical Code (NEC latest edition).

- Location of the applicable electrical service entrance is illustrated in "Dimensional Data," p. 11. Complete the unit's power wiring connections onto either; the main terminal block HTB1 inside the unit control panel, the factory mounted nonfused disconnect switch (UCD), or the electric heat terminal block. Refer to the customer connection diagram that shipped with the unit for specific termination points.
- Provide proper grounding for the unit in accordance with local and national codes. See Table 5, p. 26 for ground wire torque.

Table 5. Ground wire torque

Ground wire size (AWG)	Torque (in-lbs)
10 - 14	35
8	40
4 - 6	45
2/0 - 0	50

Optional TBUE Wiring (Through-the-Base Electrical Option)

- Location of the applicable electrical service is illustrated below. Refer to the customer connection diagram that is shipped with the unit for specific termination points. The termination points, depending on the customer option selected would be a factory mounted nonfused disconnect switch (UDC).
- Provide proper grounding for the unit in accordance with local and national codes. See Table 6, p. 26 for ground wire torque.

Table 6. Ground wire torque

Ground wire size (AWG)	Torque (in-lbs)
10 - 14	35
8	40
4 - 6	45
2/0 - 0	50

Figure 13. Through-the-base electrical option

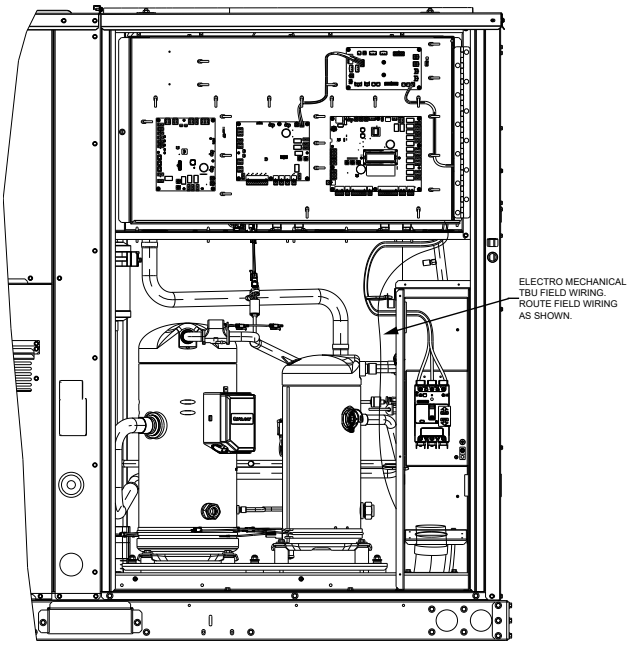

Control Power Transformer

⚠ WARNING

Hazardous Voltage!

Failure to disconnect power before servicing could result in death or serious injury.
Disconnect all electric power, including remote disconnects before servicing. Follow proper lockout/tagout procedures to ensure the power can not be inadvertently energized. Verify that no power is present with a voltmeter.

The 24-volt control power transformers should be used only with the accessories called out in this manual.

Transformers rated greater than 50 VA are equipped with internal circuit breakers. If a circuit breaker trips, turn OFF all power to the unit before attempting to reset it.

The transformer is located in the control panel. The circuit breaker is located on the left side of the transformer and can be reset by pressing in on the black reset button.

Controls using DC Analog Input/Outputs (Standard Low Voltage Multi conductor Wire)

Before installing any connecting wiring between the unit and components utilizing a DC analog input\output signal, refer to the Dimensions and Weights chapter for the electrical access locations provided on the unit.

- Table 7, p. 27 lists the conductor sizing guidelines that must be followed when interconnecting the DC binary output devices and the system components utilizing a DC analog input/output signal to the unit.

Notes:

- *Resistance in excess of 2.5 ohms per conductor can cause deviations in the accuracy of the controls.*
- *Confirm the wiring between controls and the unit termination point does not exceed two and a half (2.5) ohms/conductor for the length of the run.*

- Do not run the electrical wires transporting DC signals in or around conduit housing high voltage wires.

DC Conductors

Table 7. Zone sensor module wiring

Distance from Unit to Control	Recommended Wire Size
0 - 150 feet	22 gauge
0 - 45.7 m	0.33 mm^2
151 - 240 feet	20 gauge
46 - 73.1 m	0.50 mm^2
241 -385 feet	18 gauge
73.5 - 117.3 m	0.75 mm^2
386 - 610 feet	16 gauge
117.7 - 185.9 m	1.3 mm^2

Table 7. Zone sensor module wiring (continued)

Distance from Unit to Control	Recommended Wire Size
611 - 970 feet	14 gauge
186.2 - 295.7 m	0.2 mm^2

Note: *See Symbio™ 700 unit controls schematic, 1213-4349, for controls wiring.*

Space Temperature Averaging

Space temperature averaging is accomplished by wiring a number of remote sensors in a series/parallel circuit.

When using the BAYSENS016* or BAYSENS077*, at least four sensors are required to accomplish space temperature averaging.

- Example #1 illustrates two series circuits with two sensors in each circuit wired in parallel. The square of any number of remote sensors is required.
- Example #2 illustrates three sensors squared in a series/parallel circuit. Using BAYSENS077*, two sensors are required to accomplish space temperature averaging.
- Example #3 illustrates the circuit required for this sensor. The table below lists the temperature versus resistance coefficient for all sensors.

Figure 14. Examples

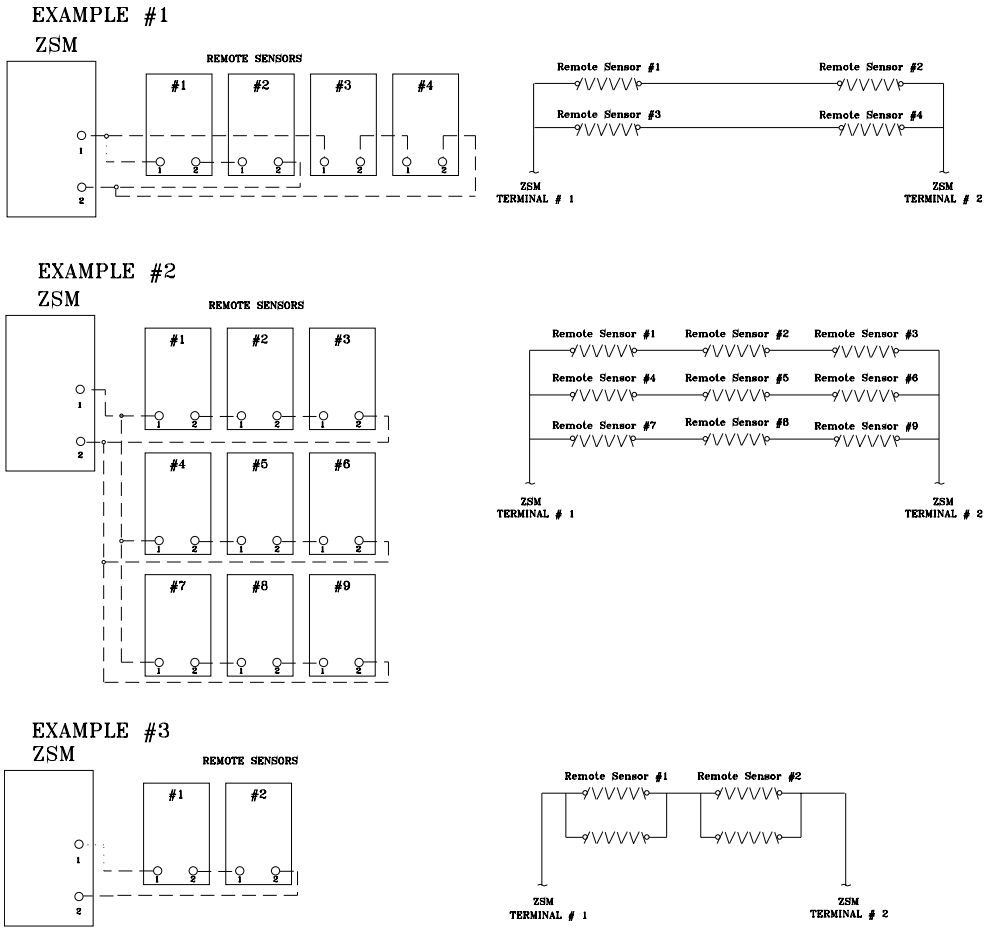

Note: *Wiring pin numbers are for reference only. There are multiple smoke detector systems that could have differently numbered pins. For correct wiring details, refer to the specific smoke detector, ship-with literature*

Table 8. Temperature vs. resistance

Temperature		Nominal Resistance (kOhms)
Degrees °F	Degrees °C	
-20	-28.9	170.1
-15	-26.1	143.5
-10	-23.3	121.4
-5	-20.6	103.0
0	-17.8	87.56
5	-15.0	74.65
10	-12.2	63.80
15	-9.4	54.66
20	-6.7	46.94
25	-3.8	40.40

Table 8. Temperature vs. resistance (continued)

Temperature		Nominal Resistance (kOhms)
Degrees °F	Degrees °C	
30	-1.1	34.85
35	1.7	30.18
40	4.4	26.22
45	7.2	22.85
50	10.0	19.96
55	12.8	17.47
60	15.6	15.33
65	18.3	13.4
70	21.1	11.89
75	23.9	10.50
80	26.7	9.297
85	29.4	8.247
90	32.2	7.330
95	35.0	6.528

Voltage Imbalance

Three phase electrical power to the unit must meet stringent requirements for the unit to operate properly. Measure each leg (phase-to-phase) of the power supply.

Each reading must fall within the utilization range stamped on the unit nameplate. If any of the readings do not fall within the proper tolerances, notify the power company to correct this situation before operating the unit.

Excessive three phase voltage imbalance between phases will cause motors to overheat and eventually fail. The maximum allowable voltage imbalance is 2 percent.

Measure and record the voltage between phases 1, 2, and 3 and calculate the amount of imbalance as follows:

% Voltage Imbalance = (100 x (AV - VD)) / AV where;

- V1, V2, V3 = Line voltage readings
- AV (Average Voltage) = (V1 + V2 + V2) / 3
- VD = Line voltage reading that deviates the farthest from the average voltage

Example:

The supply power line voltage readings (V1, V2, V3) are 221, 230, and 227 respectively.:

- AV (Average Voltage) = (221 + 230 + 227) / 3 = 226 Avg.
- VD (reading farthest from average) = 221
- % Voltage Imbalance = (100 + 226 + 221) / 226 = 2.2%

The 2.2 percent imbalance in this example exceeds the maximum allowable imbalance of 2.0 percent. This much imbalance between phases can equal as much as a 20 percent current imbalance with a resulting increase in motor winding temperatures that will decrease motor life.

If the voltage imbalance is over 2 percent, notify the proper agencies to correct the voltage problem before operating this equipment.

Electrical Phasing (Three Phase Motors)

The compressor motor(s) and the supply fan motor are internally connected for the proper rotation when the incoming power supply is phased as A, B, C.

Proper electrical supply phasing can be quickly determined and corrected before starting the unit by using an instrument such as an Associated Research Model 45 Phase Sequence Indicator and following the steps below:

⚠ WARNING

Hazardous Voltage!

Failure to disconnect power before servicing could result in death or serious injury.

Disconnect all electric power, including remote disconnects before servicing. Follow proper lockout/tagout procedures to ensure the power can not be inadvertently energized. Verify that no power is present with a voltmeter.

1. Turn the field supplied disconnect switch that provides power to the main power terminal block or to the Line side of the optional factory mounted disconnect switch to the OFF position.
2. Connect the phase sequence indicator leads to the terminal block or to the Line side of the optional factory mounted disconnect switch as follows:
   - Black (phase A) to L1
   - Red (phase B) to L2
   - Yellow (phase C) to L3
3. Close the field supplied main power disconnect switch or circuit protector switch that provides the supply power to the unit.

⚠ WARNING

Live Electrical Components!

Failure to follow all electrical safety precautions when exposed to live electrical components could result in death or serious injury.

When it is necessary to work with live electrical components, have a qualified licensed electrician or other individual who has been properly trained in handling live electrical components perform these tasks.

4. Observe the ABC and CBA phase indicator lights on the face of the sequencer. The ABC indicator light will glow if the phase is ABC. If the CBA indicator light glows, open the disconnect switch or circuit protection switch and reverse any two power wires.
5. Restore the main electrical power and recheck the phasing. If the phasing is correct, open the disconnect switch or circuit protection switch and remove the phase sequence indicator.

Compressor Crankcase Heaters

NOTICE

Compressor Failure!

Failure to follow instruction below could result in compressor failure.

Unit must be powered and crankcase heaters energized at least 8 hours BEFORE compressors are started.

Each compressor can be equipped with a crankcase heater. The proper operation of the crankcase heater is important to maintain an elevated compressor oil temperature during the OFF cycle to reduce oil foaming during compressor starts. Oil foaming occurs when refrigerant condenses in the compressor and mixes with the oil. In lower ambient conditions, refrigerant migration to the compressor could increase.

When the compressor starts, the sudden reduction in crankcase pressure causes the liquid refrigerant to boil rapidly causing the oil to foam. This condition could

damage compressor bearings due to reduced lubrication and could cause compressor mechanical failures.

Before starting the unit in the “Cooling” mode, set the system switch to the OFF position and turn the main power disconnect to the ON position and allow the crankcase heater to operate a minimum of 8 hours.

Before closing the main power disconnect switch, insure that the “System”selection switch is in the OFF position and the “Fan” selection switch is in the “Auto” position.

Close the main power disconnect switch and the unit mounted disconnect switch, if applicable.

Checklist

Use the following checklist in conjunction with the general checklist (“General Unit Requirements,” p. 23) to ensure that the unit is properly installed and ready for operation.

⚠ WARNING

Hazardous Voltage!

Failure to disconnect power before servicing could result in death or serious injury.

Disconnect all electric power, including remote disconnects before servicing. Follow proper lockout/tagout procedures to ensure the power can not be inadvertently energized. Verify that no power is present with a voltmeter.

- ☐ Check all electrical connections for tightness and point of termination accuracy.
- ☐ Verify that the condenser airflow is unobstructed.
- ☐ Verify that the condenser fan and indoor blower turn freely without rubbing and are properly tightened on the shafts.
- ☐ Check the supply fan belts for proper tension and the fan bearings for sufficient lubrication. If the belts require adjustment, or if the bearings need lubricating, refer to the maintenance section of this manual for instructions.
- ☐ Verify that a condensate trap is installed and the piping is properly sized and pitched.
- ☐ Verify that the correct size and number of filters are in place.
- ☐ Inspect the interior of the unit for tools and debris and install all panels in preparation for starting the unit.

Factory-Mounted Unit Options

Unit Disconnect (FIYUDC)

⚠ WARNING

Hazardous Voltage w/Capacitors!

Failure to disconnect power and discharge capacitors before servicing could result in death or serious injury.

Disconnect all electric power, including remote disconnects and discharge all motor start/run capacitors before servicing. Follow proper lockout/tagout procedures to ensure the power cannot be inadvertently energized. Verify with a CAT III or IV voltmeter rated per NFPA 70E that all capacitors have discharged.

⚠ WARNING

Proper Field Wiring and Grounding Required!

Failure to follow code could result in death or serious injury.

All field wiring MUST be performed by qualified personnel. Improperly installed and grounded field wiring poses FIRE and ELECTROCUTION hazards. To avoid these hazards, you MUST follow requirements for field wiring installation and grounding as described in NEC and your local/state/national electrical codes.

Important: *All phases of this installation must comply with NATIONAL, STATE, and LOCAL CODES. In addition to local codes, the installation must comply with National Electric Code - ANSI/NFPA NO. 70 LATEST REVISION.*

1. Field connections are made by removing the compressor access panel on the front of the unit. Unscrew the assembly outside of the disconnect switch. This assembly is located in the condenser section of the unit.

   Both high and low voltage power can be routed through the base or through the front corner post where the disconnect enclosure is mounted. The hole is sized for 1 1/2-in. conduit.

2. If the conduit required for your application is larger than 1 1/2-in., remove the termination plate and connect to the larger hole using field supplied reducing washers.
3. Route the power wires and ground conductor through conduit and into the bottom of the factory installed disconnect switch. Connect the power conductors to the lugs provided. Connect the ground wire to the unit ground lug. See Table 9, p. 31 for ground wire torque.

Table 9. Ground wire torque

Ground wire size (AWG)	Torque(in-lbs)
10 - 14	35
8	40
4 - 6	45
2/0 - 0	50

Note: *Wire size for the length of run should be determined using the circuit ampacity found on the unit nameplate and the N.E.C.*

4. Route low voltage (class II), control wiring through hole in base of unit but not through high voltage conduit. Feed control wiring through bushing provided on side panel. Route wires through loose wire ties provided.
5. Tighten the wire ties. Secure the excess wire bundle under the wire ties in the outdoor section. Do not leave excess wire in the electrical enclosure. Use the unit wiring diagram to make the low voltage connections.

Figure 15. Filed wiring route

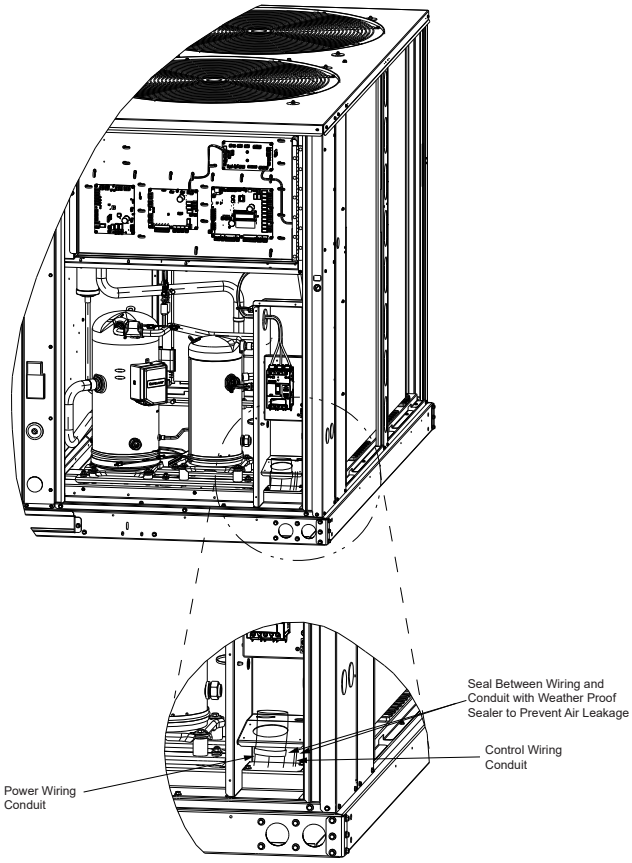

Pre Start

Verifying Proper Air Flow (Units with Belt Drive Indoor Fan)

The system's performance and reliability is closely associated with, and dependent on proper airflow supplied both to the space that is being conditioned and across the evaporator coil.

The indoor fan speed is changed by opening or closing the adjustable motor sheave.

Symbio Service and Installation Mobile App

The Symbio™ Service and Installation mobile app is accessible through mobile devices (phones and tablets) via Bluetooth connectivity or via Trane Connect. The intuitive mobile app feels natural to technicians and operators. They will quickly be able to view equipment status and alarms, perform start-up tasks, change configurations, test the equipment's performance in specific modes, and much more. Free for download from App Store (Apple iOS) and Google Play (Android devices).

Figure 16. Symbio Service and Installation app

To download the Symbio™ Service and Installation Mobile App scan the code with a mobile phone camera or naviagate to the app store and search for Symbio.

Figure 17. Download the Symbio Service and Installation app

Symbio Controls

The Symbio™ 700 supports a Service Test Mode that can be used to energize the various components of the system, either to support general system start-up tasks or to support troubleshooting. The user can initiate Service Test Mode through the controller user interfaces, including the Symbio Service and Installation mobile application.

The modes shown below can be initiated. Depending on the equipment configuration, the controller will energize the appropriate outputs. A user-selected timeout value will determine how long the controller will remain in any given state once initiated. For detailed information on how each Service Test State is interpreted based on the equipment's configuration, see *Symbio™ 700 with Foundation Packaged Rooftop Units Application Guide* (ACC-APG004*-EN).

Figure 18. Symbio 700 service test mode

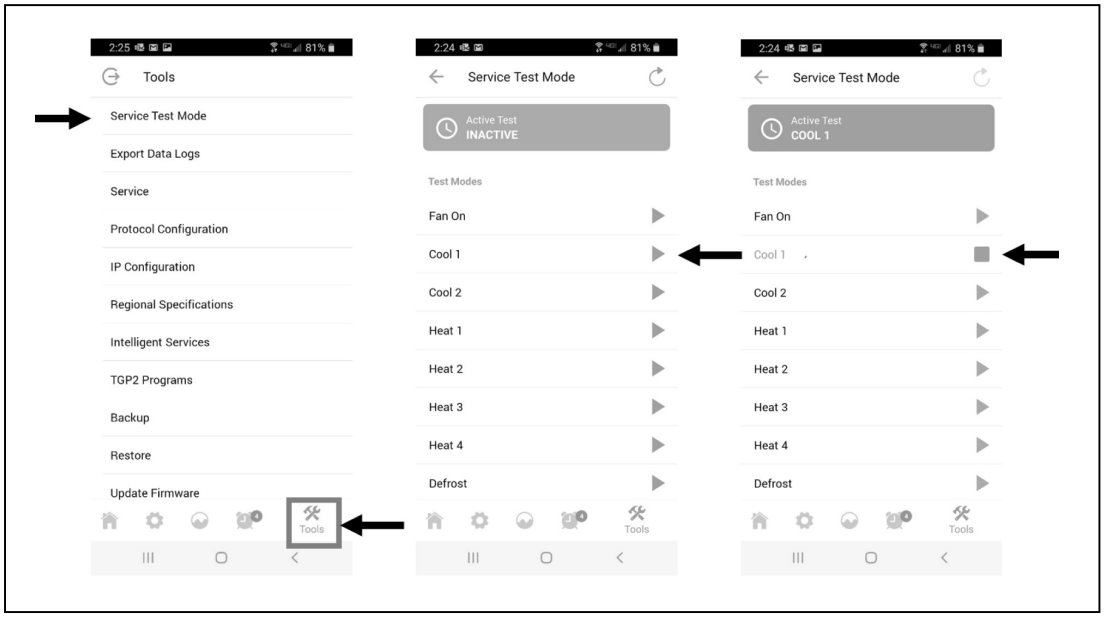

Upon powering the unit, the Symbio 700 performs self diagnostic checks to verify all internal controls are functional. When the user interface is ready or the mobile app is connected to the Symbio 700 controls, use the following test procedure to start the unit at the control panel. Each test step can be activated individually by selecting the unit operating stage desired. The unit can be left in any test step for up to one hour (adjustable to values between 1 and 120 minutes) before Service Test will automatically terminate. Once Service Test has been terminated, a system reset will occur and the unit will revert to the normal system control.

Table 10. Service test state request

Device Request / Service Test Step[a]	Supply fan On/Off request	Supply fan speed request (VVZT, CVZT)	Outdoor air damper position request	Compressor cool stage request	Condenser Fan (Info Only)[b]	Aux heat stage request	Relief fan On/ Off request	Heat cool mode status (VVZT, CVZT)
Inactive	In Control	In Control	In Control	In Control	In Control	In Control	In Control	In Control
Fan On	ON	Min	Min	0	In Control	0	In Control	Test
Fan On Econ Open	ON	Min	100	0	In Control	0	In Control	Test
High Fan Speed Econ Open	ON	100	100	0	In Control	0	In Control	Test
Ventilation Low Fan Speed	ON	Min	Design Min	0	In Control	0		
Ventilation Mid Fan Speed	ON	Effective Mid[c]	Design Mid	0	In Control	0	In Control	Test
Ventilation High Fan Speed	ON	100	Design Max	0	In Control	0	In Control	Test
Cool 1	ON	Min for Capacity	Min	1	In Control	0	In Control	Test
Cool 2	ON	Min for Capacity	Min	2	In Control	0	In Control	Test
Cool 3	ON	Min for Capacity	Min	3	In Control	0	In Control	Test
Cool 4	ON	Min for Capacity	Min	4	In Control	0	In Control	Test
Cool 5	ON	Min for Capacity	Min	5	In Control	0	In Control	Test
Heat 1	ON	100	Min	0	In Control	1	In Control	Test
Heat 2	ON	100	Min	0	In Control	2	In Control	Test

(a) Service test mode is allowed to perform Dx cooling and heating operation regardless of the Refrigerant Mitigation Active status.
(b) Condenser fan is always in control during active service test mode.
(c) Supply Fan Speed Request "Effective Mid" equals to (Effective Maximum Fan Speed + Effective Minimum Fan Speed)/2.

Start-Up

Symbio 700 Controls – Sequence of Operation

These units are offered with Symbio™ 700 controls.

See *Symbio™ 700 Controller with Foundation™ Packaged Rooftop Units 15 to 25 Tons Application Guide* (ACC-APG004*-EN) for more details on sequence of operation.

Compressor Start-Up

1. Attach a set of service gauges onto the suction and discharge gauge ports for each circuit. Refer to the refrigerant circuit illustration in the Service Facts.

   Scroll Compressors

   a. Once each compressor has started, verify that the rotation is correct. If wired correctly the suction pressure should drop and the discharge pressure should rise. If a scroll compressor is rotating backwards, it will not pump and a loud rattling sound can be observed.

   b. If the electrical phasing is correct, before condemning a compressor, interchange any two leads (at the compressor Terminal block) to check the internal phasing. Refer to the following illustration for the compressor terminal/phase identification. Do not allow the compressor to operate backwards for more than 5 seconds. Operation for a period of time longer than this will result in compressor damage.

   Note: *Copeland YA scroll compressors for R-454B units use Trane OIL00094. Compressor types and appropriate oil charge is listed in the following tables.*

   Table 11. Compressor types

Tonnage	Compressor 1	Compressor 2
EDK180	YA104K1E*	YA51K1E*
EDK210	YA122K1E*	YA61K1E*
EDK240	YA137K1E*	YAS76K1E*
EDK300	YA154K1E*	YAS91K1E*

   Table 12. POE Oil recharge amount (fl. oz.)

Tonnage	Compressor 1	Compressor 2
EDK180	81	36
EDK210	81	36
EDK240	118	54
EDK300	118	54

2. After the compressor and condenser fan have started and operated for approximately 30 minutes, observe the operating pressures. Compare the operating pressures to the operating pressure curve in the Service Facts.
3. Check system subcooling. Follow the instruction listed on the subcooling charging curve in the Service Facts.
4. Repeat Step 1 through Step 3 for each refrigerant circuit.
5. To stop the SERVICE TEST, turn the main power disconnect switch to the OFF position or proceed to the next component start-up procedure. Remove electromechanical test mode connections (if applicable).

Heating Start-Up

1. Clamp an amp meter around one of 1st stage heater power wires at the heater contactor.
2. Verify that the heater stage is operating properly.
3. Clamp an amp meter around one of 2nd stage heater power wires at the heater contactor (if applicable).
4. Verify that the heater stage is operating properly.
5. To exit Service Test Mode, choose the "Inactive" service test step. Once Service Test is terminated, a system reset occurs and the unit reverts to the normal system control.

Final System Setup

After completing all of the pre-start and start-up procedures outlined in the previous sections (i.e., operating the unit in each of its modes through all available stages of cooling and heating), perform these final checks before leaving the unit:

- ☐ Program the Night Setback (NSB) panel (if applicable) for proper unoccupied operation. Refer to the programming instructions for the specific panel.
- ☐ Verify that the Remote panel “System” selection switch, “Fan” selection switch, and “Zone Temperature” settings for automatic operation are correct.
- ☐ Inspect the unit for misplaced tools, hardware, and debris.
- ☐ Verify that all exterior panels including the control panel doors and condenser grilles are secured in place.
- ☐ Close the main disconnect switch or circuit protector switch that provides the supply power to the unit’s terminal block or the unit mounted disconnect switch.

Maintenance

Make sure all personnel are standing clear of the unit before proceeding. The system components will start when the power is applied.

Fan Belt Adjustment-Belt Drive Units

⚠ WARNING

Rotating Components!

Failure to disconnect power before servicing could result in rotating components cutting and slashing technician which could result in death or serious injury.
Disconnect all electric power, including remote disconnects before servicing. Follow proper lockout/tagout procedures to ensure the power can not be inadvertently energized.

The fan belts must be inspected periodically to assure proper unit operation. Replacement is necessary if the belts appear frayed or worn. Units with dual belts require a matched set of belts to ensure equal belt length.

When removing or installing the new belts, do not stretch them over the sheaves. Loosen the belts using the belt tension adjustment bolts on the motor mounting base.

Once the new belts are installed, using a Browning or Gates tension gauge (or equivalent), adjust the belt tension as follows:

1. To determine the appropriate belt deflection:
   a. Measure the center-to-center shaft distance (in inches) between the fan and motor sheaves.
   b. Divide the distance measured in Step 1a by 64; the resulting value represents the amount of belt deflection that corresponds to the proper belt tension.
2. Set the large O-ring on the belt tension gauge at the deflection value determined in Step 1b.
3. Set the small O-ring at zero on the force scale of the gauge plunger.
4. Place the large end of the gauge at the center of the belt span; then depress the gauge plunger until the large O-ring is even with the top of the next belt or even with a straightedge placed across the fan and motor sheaves.
5. Remove the belt tension gauge. The small O-ring now indicates a number other than zero on the plunger's force scale. This number represents the force (in pounds) required to give the needed deflection.
6. Compare the force scale reading (Step 5) with the appropriate force value listed in the Belt tension table. If the force reading is outside the range, readjust the belt tension.

   Note: *Actual belt deflection force must not exceed the maximum force value shown in the Belt tension measurement and deflection ranges table.*
7. Recheck the belt tension at least twice during the first 2 to 3 days of operation. Belt tension may decrease until the new belts are run in.

Figure 19. Belt tension gauge

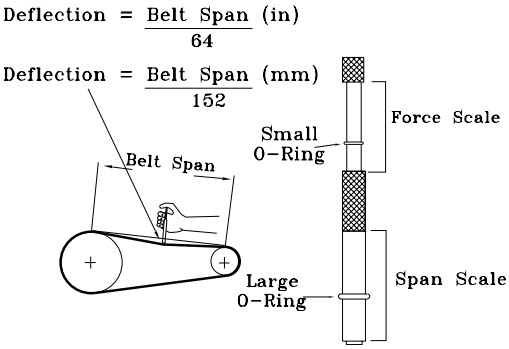

Table 13. Belt tension measurement and deflection ranges (in/lb)

Belts Cross Section	Small P.D Range (in)	Deflection Force (lb)					
		Super Gripbelts (in)		Gripnotch (in)		Steel Cable Gripbelts (in)	
		Min.	Max.	Min.	Max	Min.	Max.
A	3.0–3.6	3.00	4.50	3.87	5.50	3.25	4.00
	3.8–4.8	3.50	5.00	4.50	6.25	3.75	4.75
	5.0–7.0	4.00	5.50	5.00	6.87	4.25	5.25
B	3.4–4.2	4.00	5.50	5.75	8.00	4.50	5.50
	4.4–5.6	5.12	7.12	6.50	9.12	5.75	7.25
	5.8–8.8	6.37	8.75	7.37	10.12	7.00	8.75

Table 14. Belt tension measurement and deflection ranges (mm/kg)

Belts Cross Section	Small P.D Range (mm)	Deflection Force (kg)					
		Super Gripbelts (mm)		Gripnotch (mm)		Steel Cable Gripbelts (mm)	
		Min.	Max.	Min.	Max.	Min.	Max
A	13.3–16.0	13.3	20.0	17.2	24.5	14.5	17.8
	16.9–21.4	15.6	22.2	20.0	27.8	16.7	21.1
	22.0–31.1	17.8	24.5	22.2	30.6	18.9	23.4
B	15.1–18.7	17.8	24.5	25.6	35.6	20.0	24.5
	19.6–24.9	22.8	31.7	28.9	40.6	25.6	32.3
	25.8–39.1	28.4	38.9	32.8	45.0	31.1	38.9

Monthly Maintenance

Before completing the following checks, turn the unit OFF and lock the main power disconnect switch open.

⚠ WARNING

Hazardous Voltage!

Failure to disconnect power before servicing could result in death or serious injury.

Disconnect all electric power, including remote disconnects before servicing. Follow proper lockout/tagout procedures to ensure the power can not be inadvertently energized. Verify that no power is present with a voltmeter.

Filters

Inspect the return air filters. Clean or replace them if necessary. Refer to the unit Service Facts for filter information.

Condensate Overflow Switch

During maintenance, the switch float (black ring) must be checked to ensure free movement up and down.

Cooling Season

- ☐ Check the unit's drain pans and condensate piping to ensure that there are no blockages.
- ☐ Inspect the evaporator and condenser coils for dirt, bent fins, etc. If the coils appear dirty, clean them according to the instructions described in "Coil Cleaning," p. 37.
- ☐ Manually rotate the condenser fans to ensure free movement and check motor bearings for wear. Verify that all of the fan mounting hardware is tight.
- ☐ Inspect the F/A-R/A damper hinges and pins to ensure that all moving parts are securely mounted. Keep the blades clean as necessary.

⚠ WARNING

Rotating Components!

Failure to disconnect power before servicing could result in rotating components cutting and slashing technician which could result in death or serious injury.

During installation, testing, servicing and troubleshooting of this product it may be necessary to work with live and exposed rotating components. Have a qualified or licensed service individual who has been properly trained in handling exposed rotating components, perform these tasks.

NOTICE

Equipment Damage!

Forcibly turning the motor shaft can damage the gear train and motor beyond repair.

Never turn the motor shaft by hand or with a wrench.

- ☐ Verify that all damper linkages move freely; lubricate with white grease, if necessary.
- ☐ Check supply fan motor bearings; repair or replace the motor as necessary.
- ☐ Check the fan shaft bearings for wear. Replace the bearings as necessary.
- ☐ Check the supply fan belt(s). If the belts are frayed or worn, replace them. See the "Fan Belt Adjustment-Belt Drive Units," p. 35 for belt replacement and adjustments.
- ☐ Verify that all wire terminal connections are tight.
- ☐ Remove any corrosion present on the exterior surfaces of the unit and repaint these areas.
- ☐ Generally inspect the unit for unusual conditions (e.g., loose access panels, leaking piping connections, etc.)
- ☐ Make sure that all retaining screws are reinstalled in the unit access panels once these checks are complete.
- ☐ With the unit running, check and record the following:

- ambient temperature
- compressor oil level (each circuit)
- compressor suction and discharge pressures (each circuit)
- superheat and subcooling (each circuit)

Record this data on an operator's maintenance log like the one shown in Sample maintenance log table in Final Process Section. If the operating pressures indicate a refrigerant shortage, measure the system superheat and system subcooling. For guidelines, see the "Compressor Start-Up," p. 34.

Important: *Do not release refrigerant to the atmosphere! If adding or removing refrigerant is required, the service technician must comply with all federal, state and local laws. See the General Service Bulletin MSCU-SB-1 (latest edition).*

Heating Season

- ☐ Inspect the unit's air filters. If necessary, clean or replace them.
- ☐ Check supply fan motor bearings; repair or replace the motor as necessary.
- ☐ Inspect both the main unit control panel and heat section control box for loose electrical components and terminal connections, as well as damaged wire insulation. Make any necessary repairs.
- ☐ Verify that the electric heat system operates properly.

Coil Cleaning

Regular coil maintenance, including annual cleaning enhances the unit's operating efficiency by minimizing the following:

- Compressor head pressure and amperage draw
- Evaporator water carryover
- Fan brake horsepower
- Static pressure losses
- Airflow reduction

At least once each year, or more often if the unit is located in a "dirty" environment, clean the condenser coils using the instructions outlined below. Be sure to follow these instructions as closely as possible to avoid damaging the coils.

⚠ WARNING

Hazardous Chemicals!

Failure to follow this safety precaution could result in death or serious injury. Coil cleaning agents can be either acidic or highly alkaline and can burn severely if contact with skin or eyes occurs.

Handle chemical carefully and avoid contact with skin. ALWAYS wear Personal Protective Equipment (PPE) including goggles or face shield, chemical resistant gloves, boots, apron or suit as required. For personal safety refer to the cleaning agent manufacturer's Materials Safety Data Sheet and follow all recommended safe handling practices.

Microchannel (MCHE) Coils

NOTICE

Coil Damage!

Failure to follow instructions below could result in coil damage.

DO NOT use any detergents with microchannel condenser coils.

Use pressurized water or air ONLY, with pressure no greater than 600psi.

For additional information regarding the proper microchannel coil cleaning procedure, refer to RT-SVB83*-EN

Due to the soft material and thin walls of the MCHE coils, the traditional field maintenance method recommended for Round Tube Plate Fin (RTPF) coils does not apply to microchannel coils. Moreover, chemical cleaners are a risk factor to MCHE due to the material of the coil. The manufacturer does not recommend the use of chemical cleaners to clean microchannel coils. Using chemical cleaners could lead to warranty claims being further evaluated for validity and failure analysis.

The recommended cleaning method for microchannel condenser coils is pressurized water or air with a non-pinpoint nozzle and an ECU of at least 180 with pressure no greater than 600 psi. To minimize the risk of coil damage, approach the cleaning of the coil with the pressure washer aimed perpendicular to the face of the coil during cleaning. Optimum clearance between the sprayer nozzle and the microchannel coil is 1-inch to 3-inch.

Final Process

For future reference, record the unit data below in the blanks provided.

Table 15. Unit data log

Complete Unit Model Number	
Unit Serial Number	
Wiring Diagram Numbers (from unit control panel)	

Table 15. Unit data log (continued)

-schematic(s)	
-connections	
Network ID	

Table 16. Sample maintenance log

Date	Current Ambient Temp F/C	Refrigerant Circuit #1						Refrigerant Circuit #2					
		Compr. Oil Level	Suct. Press. Psig/kPa	Disch. Press Psig/kPa	Liquid Press Psig/kPa	Superheat F/C	Sub-cool F/C	Compr. Oil Level	Suct. Press. Psig/kPa	Disch. Press Psig/kPa	Liquid Press Psig/kPa	Superheat F/C	Sub-cool F/C
		- ok - low						- ok - low					
		- ok - low						- ok - low					
		- ok - low						- ok - low					
		- ok - low						- ok - low					
		- ok - low						- ok - low					
		- ok - low						- ok - low					
		- ok - low						- ok - low					
		- ok - low						- ok - low					
		- ok - low						- ok - low					
		- ok - low						- ok - low					
		- ok - low						- ok - low					
		- ok - low						- ok - low					
		- ok - low						- ok - low					
		- ok - low						- ok - low					

Troubleshooting

⚠ WARNING

Hazardous Service Procedures!

Failure to follow all precautions in this manual and on the tags, stickers, and labels could result in death or serious injury.

Technicians, in order to protect themselves from potential electrical, mechanical, and chemical hazards, MUST follow precautions in this manual and on the tags, stickers, and labels, as well as the following instructions: Unless specified otherwise, disconnect all electrical power including remote disconnect and discharge all energy storing devices such as capacitors before servicing. Follow proper lockout/tagout procedures to ensure the power can not be inadvertently energized. When necessary to work with live electrical components, have a qualified licensed electrician or other individual who has been trained in handling live electrical components perform these tasks.

Symbio Controls

See *Symbio™ 700 Controller with Foundation™ Packaged Rooftop Units 15 to 25 Tons Application Guide* (ACC-APG004*-EN).

Wiring Diagrams

Note: *Wiring diagrams can be accessed via e-Library by entering the diagram number in the literature order number search field or by contacting technical support.*

SchematicType	Controls	Diagram number	Voltage	Description
Power	Symbio 700	12134903	208-575V	SCHEMATIC, SHEET 1, POWER, 15 to 25 tons
	Symbio 700	12134904	208-575V	SCHEMATIC, SHEET 2, PWR, COOLING ONLY 15 to 25 tons
	Symbio 700	12134905	208-230V	SCHEMATIC, SHEET 2, PWR, 2-STAGE GH 15 to 25 tons, 208V-230V
	Symbio 700	12134906	460V, 575V	SCHEMATIC, SHEET 2, PWR, 2-STAGE GH 15 to 25 tons, 460V/575V
Control	Symbio 700	12134907	208-575V	SCHEMATIC, SHEET 3, CONTROLS, SYMBIO 700 UNIT CONTROLS
	Symbio 700	12134908	208-575V	SCHEMATIC, SHEET 4, CONTROLS, ADAPTOR BOARD UNIT CONTROLS
	Symbio 700	12134909	208-575V	SCHEMATIC, SHEET 5, CONTROLS, INDOOR OPTIONS
	Symbio 700	12134910	208-575V	SCHEMATIC, SHEET 6, CONTROLS, FRESH AIR OPTIONS
	Symbio 700	12134911	208-575V	SCHEMATIC, SHEET 7, CONTROLS, CUSTOMER CONNECTIONS MODULE
Component location	Symbio 700	12134912	208-575V	DIAGRAM; COMPONENT LOCATION - 15 to 25 tons - 60 HZ
Electric heat	Symbio 700	12134913	208-230V	DIAGRAM; SCHEMATIC/COMPONENT LOCATION - ELECTRIC HEAT - 18KW - 208V/ 240V
	Symbio 700	12134914	208-230V	DIAGRAM; SCHEMATIC/COMPONENT LOCATION - ELECTRIC HEAT - 36KW - 208V/ 240V
	Symbio 700	12134915	208-230V	DIAGRAM; SCHEMATIC/COMPONENT LOCATION - ELECTRIC HEAT - 54KW - 208V/ 240V
	Symbio 700	12134916	208-230V	DIAGRAM; SCHEMATIC/COMPONENT LOCATION - ELECTRIC HEAT - 72KW - 208V/ 240V
	Symbio 700	12134917	460-575V	DIAGRAM; SCHEMATIC/COMPONENT LOCATION - ELECTRIC HEAT - 18KW - 460V/ 575V
	Symbio 700	12134918	460-575V	DIAGRAM; SCHEMATIC/COMPONENT LOCATION - ELECTRIC HEAT-36KW - 460V/ 575V
	Symbio 700	12134919	460-575V	DIAGRAM; SCHEMATIC/COMPONENT LOCATION - ELECTRIC HEAT - 54KW - 480V/ 575V
	Symbio 700	12134920	460-575V	DIAGRAM; SCHEMATIC/COMPONENT LOCATION- ELECTRIC HEAT - 72KW - 460V/ 575V

Warranty

For Commercial Unitary Equipment Rated 25 Tons and Under and Related Accessories

Products Covered — This warranty is extended by Trane, and applies to the following products:

- All Foundation™ packaged and Odyssey™ split system air conditioners and heat pumps have a rated capacity of 25 tons and under.
- All Foundation packaged combinations gas/electric air conditioners having a rated capacity of 25 tons and under.
- All packaged combination gas/electric air conditioners having a rated capacity of 1.5 through 5 tons single phase electric power and used for commercial applications. (As used in this warranty, a commercial application is any application where the end purchaser uses the product for other than personal, family or household purposes.)
- All accessories for the above products which are sold by Trane and applied in accordance with Trane specifications.

Basic Warranty

The warrantor warrants for a period of twelve (12) months from the initial start-up or eighteen (18) months from date of shipment, whichever is sooner, that the products covered by this warranty (1) are free from defects in material and manufacture, and (2) have the capacities and ratings set forth in the warrantor's catalogs and bulletins. If any part of your air conditioner fails because of a manufacturing defect, Warrantor will furnish without charge the required replacement part.

If the heat exchanger fails because of a manufacturing defect within five years from the date of start-up, Warrantor will furnish without charge a replacement heat exchanger. In addition, if the optional, factory installed, stainless steel heat exchanger fails because of a manufacturing defect within ten years from the date of start-up, Warrantor will furnish without charge a replacement heat exchanger.

Any local transportation, related service labor and diagnosis calls are not included. In addition, if the sealed motor-compressor fails because of a manufacturing defect within the second through fifth year from the date of original purchase, Warrantor will furnish without charge the required replacement compressor.

Exclusions and Limitations

The warrantor's obligations and liabilities under this warranty are limited to furnishing F.O.B. factory or warehouse at the warrantor-designated shipping point, freight allowed to Buyer's city (or port of export for shipments outside the conterminous United States) a replacement product or, at the option of the warrantor, parts for the repair of the product not conforming to this warranty and which have been returned to the warrantor.

The warrantor's warranty is conditional on the Customer providing written notice to the warrantor within thirty (30) days of the discovery of the defect. No product shall be returned to the warrantor without the warrantor's written permission. No liability whatever shall attach to warrantor until said products have been fully paid for and then said liability shall be limited to the purchase price of the equipment shown to be defective.

The warranty does not apply to any compressor or gas-fired heat exchanger which has been repaired or altered in such manner as, in the judgement of the warrantor, affects its stability or reliability. This warranty does not cover (1) any heat exchanger which has been fired with an improper type of fuel (2) a heat exchanger which is installed in a beauty parlor, dry cleaning establishment, de-greasing plant or in any corrosive atmosphere; or (3) any heat exchanger which is not shown to be defective by the warrantor's inspection.

This warranty does not cover damage due to accident, abuse, improper use, external causes, freezing, corrosion, erosion or deterioration. Local transportation, related service labor, air filters, diagnosis calls, refrigerant and related items are not covered.

THE WARRANTY AND LIABILITY SET FORTH HEREIN ARE IN LIEU OF ALL OTHER WARRANTIES AND LIABILITIES, WHETHER IN CONTRACT OR IN NEGLIGENCE, EXPRESS OR IMPLIED, IN LAW OR IN FACT, INCLUDING IMPLIED WARRANTIES OR MERCHANTABILITY AND FITNESS FOR A PARTICULAR PURPOSE AND ANY IMPLIED WARRANTIES OTHERWISE ARISING FROM THE COURSE OF DEALING OR TRADE. IN NO EVENT SHALL THE WARRANTOR BE LIABLE FOR ANY INCIDENTAL OR CONSEQUENTIAL DAMAGES.

The warrantor makes certain further warranty protection available on an optional, extra-cost basis. Any further warranty must be in writing. If you wish further help or information concerning this warranty, contact: Trane — Warrantor, 2701 Wilma Rudolph Blvd., Clarksville, TN 37040

Trane and American Standard create comfortable, energy efficient indoor environments for commercial and residential applications. For more information, please visit trane.com or americanstandardair.com.

Trane and American Standard have a policy of continuous product and product data improvement and reserve the right to change design and specifications without notice. We are committed to using environmentally conscious print practices.

RT-SVX094C-EN 31 Oct 2025
Supersedes RT-SVX094B-EN (February 2025)

©2025